Multi-dimensional force sensor

Multi-dimensional force sensor is widely used in the research of robot nger and claw; robot surge ; nger force; tooth force; force feedback; brake detection; precision assembly, cutting; restoration; Plastic surge research; product testing; tactile feedback; teaching learning. Indust covers robotics, automotive manufacturing, automated assembly line, biomechanics, Aerospace, textile indust and other elds.

Shenzhen Kaidechang Electronic Technology Co., Ltd

ADD: 3rd Floor, Wutong Space, No. 2123, Bixin Road, Longgang District, Shenzhen, Guangdong Province
E-mail: 3176708292@qq.com / 13265873957@163.com
Number: +86-13265873957 / +86-18123659512







KDEV-D-0A



Product characteristics

- This product can be measured in different directions of the force in space, with high sensitivity, small mutual inte erence and so on. It can be used to detect multi-axis force of cutting tool and multi-axis force of robot polishing in the process of milling and grinding machine. As well as a variety of three-dimensional force detection occasions.

Mounting dimensions

KDEV-D-0A-40

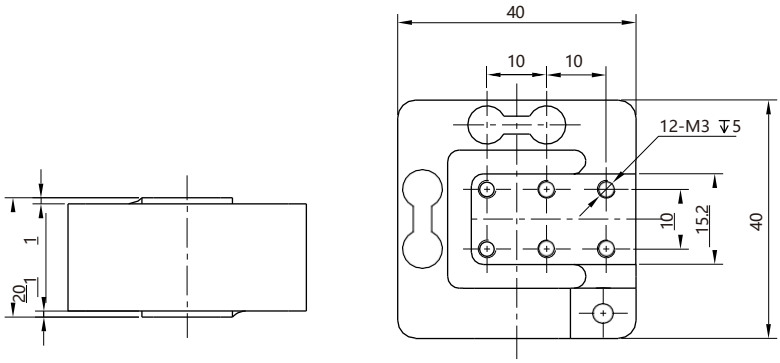

KDEV-D-0A-60

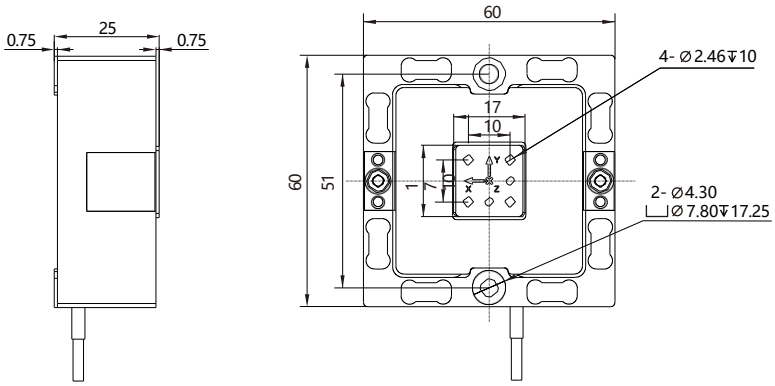

KDEV-D-0A-120

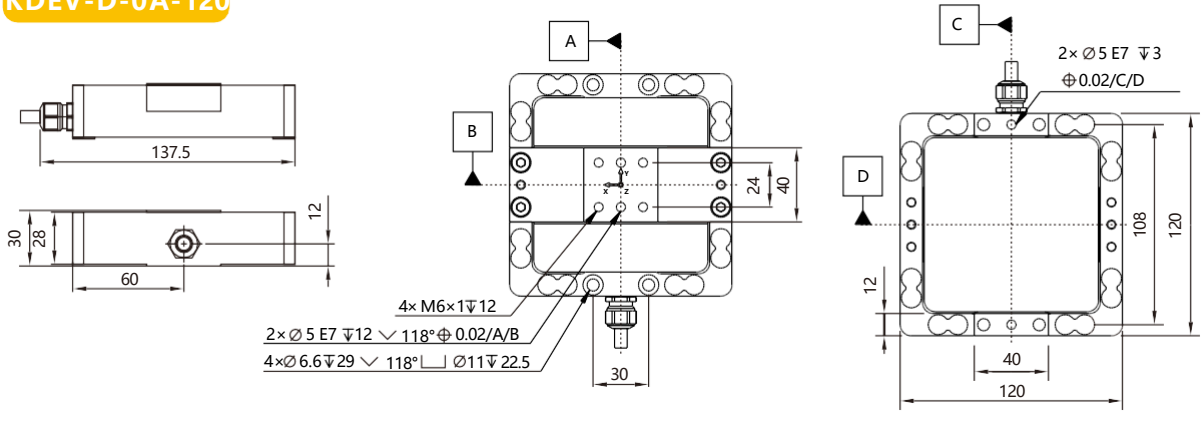

KDEV-D-0A-160

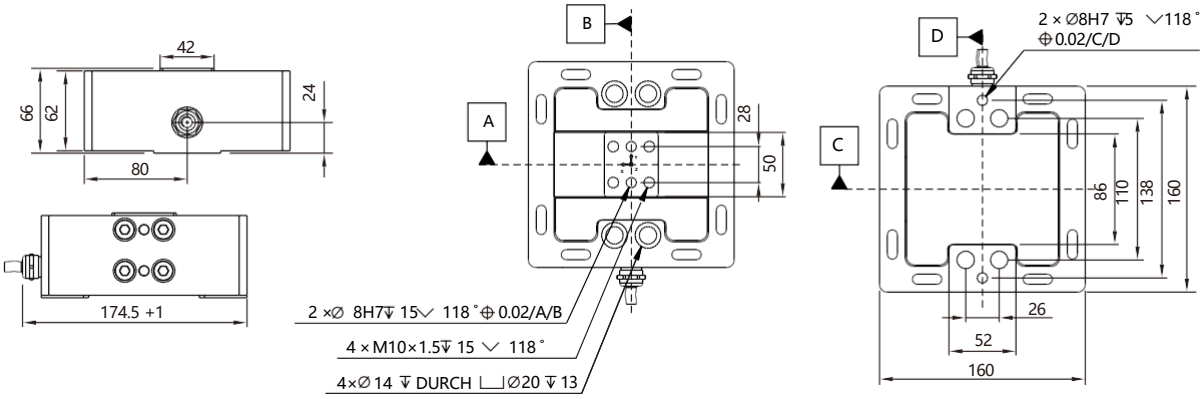

KDEV-D-0A-300

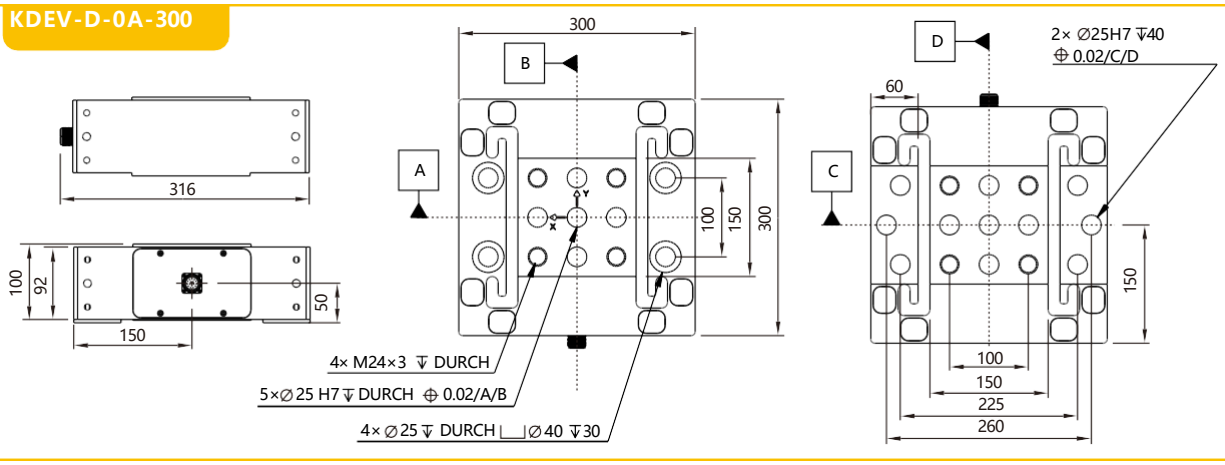

KDEV-D

Technical parameters

model	Range: (same X, Y, and Z axes)	External dimensions	material
KDEV-D-0A-40	±10/20/50/100 kg	40×40×20	stainless steel
KDEV-D-0A-40A	±0.2/0.5/1/2/5/10 kg		aluminum alloy
KDEV-D-0A-60	±20/50 /100/200 kg	60×60×25	stainless steel
KDEV-D-0A-60A	±5/10/20 kg		aluminum alloy
KDEV-D-0A-120	±20/50 /100/200/500 kg	120×120×30	stainless steel or alloy steel
KDEV-D-0A-160	±0.2/0.5/1/2/5 T	160×160×66	stainless steel or alloy steel
KDEV-D-0A-300	±5/10/20 T	300×300×100	stainless steel or alloy steel
(Output sensitivity)	0.5~2.0mv/V	(Sensitivity temperature effect)	0.1%F.S
(Zero-bit output)	±2%	(Zero temperature effect)	0.1%F.S
(Nonlinear)	0.2%F.S (耦合)	(Temperature compensation range)	-10~40°C
(Lag)	0.2%F.S	(Operating temperature range)	-20~70°C
(Repeatability)	0.2%F.S	(Excitation voltage)	5~12V
(Input Resistance)	750/385±5Ω	(SAFE overload range)	120%F.S
(Output Resistance)	700/350±3Ω	(Limit Overload Range)	150%F.S
(Three-axis mutual disturbance error)	1%F.S	(Cable specifications)	Φ5mm×3m



KDEV-D-0G

Product characteristics

- Three-dimensional force measurement, stainless steel structure, strong and durable. Using gold foil strain gauge technology, small mutual inte erence error is widely used in indust , R & D and other fields of measurement and control.

Mounting dimensions

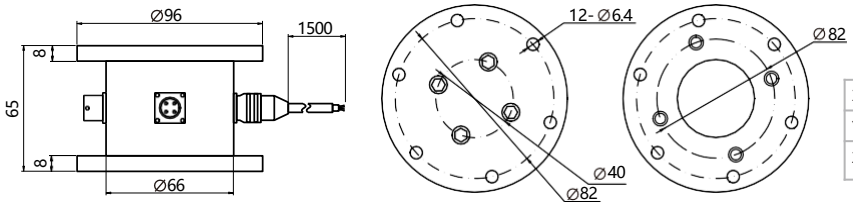

kg	
X:20/30/50/100/150/200/300/500	The interference error between the forces in three directions is less than 5%
Y:20/30/50/100/150/200/300/500	
Z:30/50/100/200/300/500/1000	

Technical parameters

(Measuring range)	Range as shown in the table above	(Sensitivity temperature effect)	±0.5%F.S/10℃
(Composite Error)	≤±3.0%	(Zero temperature effect)	±0.5%F.S/10℃
(Non-linear)	1.0%	(Temperature compensation range)	-10~60℃
(Sensitivity)	1.0±10%mV/V	(Operating temperature range)	-20~80℃
(Creep)	±0.05%F.S/30min	(Excitation voltage)	5~12V
(Zero output)	±2.0%F.S	(SAFE overload range)	120%F.S
(Input impedance)	385±30Ω	(Limit Overload Range)	200%F.S
(Output impedance)	350±5Ω	(Cable specifications)	Φ5mm×3m
(Insulation Resistance)	≥5000MΩ/100V DC	(Protection level)	Ip65



KDEV-D-0H

Product characteristics

- This product can be measured in different directions of the force in space, with high sensitivity, small mutual interference and so on. It can be used to detect multi-axis force of cutting tool and multi-axis force of robot polishing in the process of milling and grinding machine.

Mounting dimensions

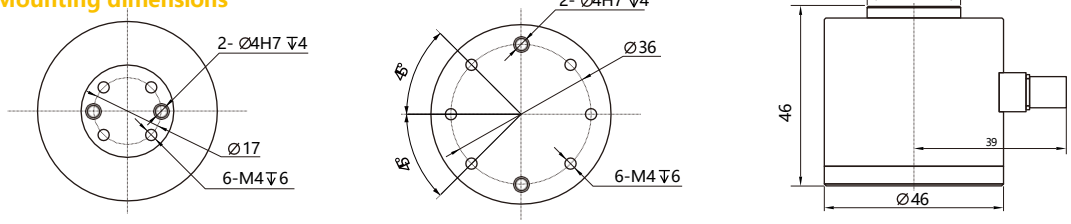

Technical parameters

(Measuring range)	X: 5/10/20/50/100 kg, Y: 5/10/20/50/100 kg, Z: 5/10/20/50/100/200 kg		
(Composite Error)	≤±2.0%	(Sensitivity temperature effect)	±0.1%F.S/10℃
(Non-linear)	0.3%F.S.	(Zero temperature effect)	±0.1%F.S/10℃
(Output sensitivity)	≈1.0mV/V	(Temperature compensation range)	-10~40℃
(Creep)	±0.05%F.S/30min	(Operating temperature range)	-20~75℃
(Zero output)	±2.0%F.S.	(Excitation voltage)	5~12V
(Input impedance)	350±10Ω	(SAFE overload range)	150%F.S
(Output impedance)	350±10Ω	(Limit Overload Range)	300%F.S
(Insulation Resistance)	≥5000MΩ/100V DC	(Protection level)	Ip65



KDEV-D-09

Product characteristics

- High response speed, wide range of sensor, resistance strain type principle, high precision, upper and lower flange mounting, stable
- structure, high sti ness, small crosstalk error, strong long-term stability, after high and low temperature compensation, good temperature characteristics.

Mounting dimensions

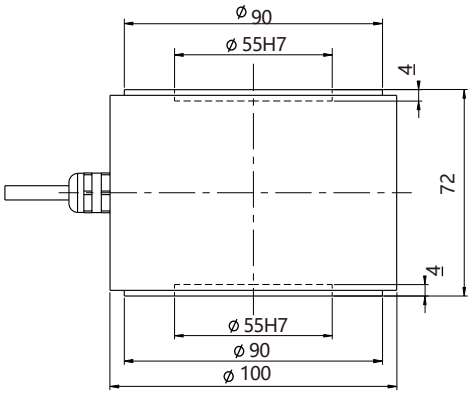

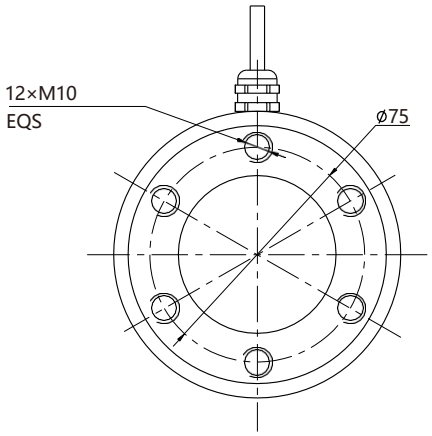

Technical parameters

(Measuring range)	Fx	1T	2.5T	5T
	Fy	1T	2.5T	5T
	Fz	1T	2.5T	5T
(Output sensitivity)	1.0±10%mV/V	(Long-term crosstalk error)		≤1%F.S.
(Nonlinear)	≤1%F.S.	(Safety overload)		150%F.S
(Repeatability)	≤0.2%F.S.	(Insulation Resistance)		≥2000MΩ/50V DC
(Zero output)	±2%F.S.	(Cable specifications)		Φ5mm×3m
(Operating temperature range)	-20~80℃	(Protection level)		Ip65
(Temperature Compensation Range)	-10~40℃	(Recommended excitation voltage)		5~10VDC
(Temperature sensitivity drift)	≤0.1%F.S/10℃	(Material)		stainless steel
(Zero temperature drift)	≤0.1%F.S/10℃	(Connection mode)	Voltage	Exc+: Red Exc-:Black
			Fx	Sig+:Gray Sig-: Green
			Fy	Sig+: Brown Sig-: Yellow
			Fz	Sig+: White Sig-: Blue



KDEV-D-F0A

Product characteristics

- Six-axis joint calibration, fully suppress crosstalk, miniature high-precision six-axis force sensor, using aviation alloy, high overload, both high stiffness and high sensitivity.

Mounting dimensions

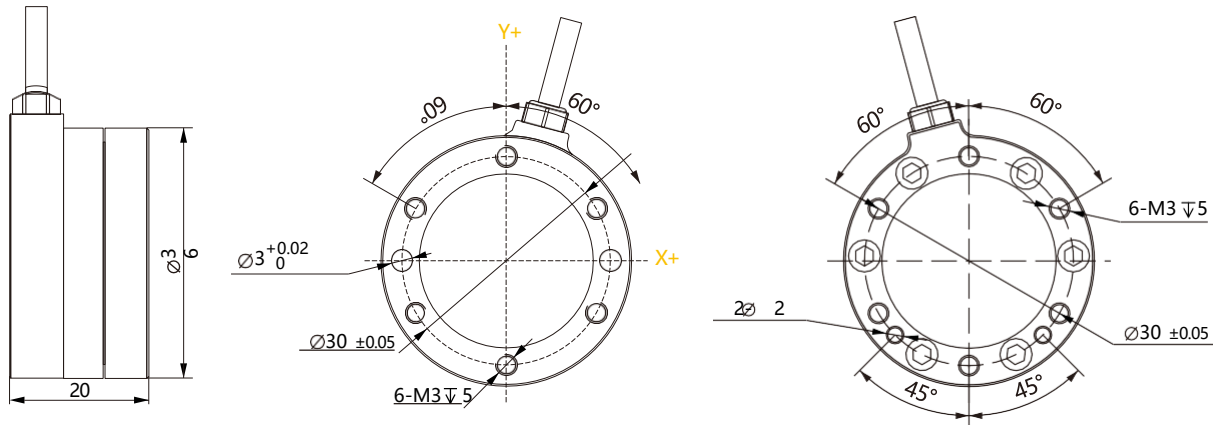

(performance parameters)		model		
		KDEV-D-F0A1	KDEV-D-F0A2	KDEV-D-F0A3
Fx,Fy	N	30	50	80
Fz	N	30	50	80
Mx,My	Nm	1.5	2	3
Mz	Nm	1.5	2	3
(Diameter)	mm	36	36	36
(Height)	mm	20	20	20
(Material)	/	Aluminum alloy	Aluminum alloy	Aluminum alloy
(Surface treatment)	/	Anodization	Anodization	Anodization
(Overload level)	%FS	300	300	300
(Resolution)	%FS	0.03	0.03	0.03
(Repetition accuracy)	%FS	0.1	0.1	0.1
(Accuracy)	%FS	0.5	0.5	0.5
(Weight)	kg	0.04	0.05	0.06
(Protection level)	/	Ip64	Ip64	Ip64
(Operating temperature)	℃	5~80	5~80	5~80
(sampling rate)	Hz	1000	1000	1000
(Supply Voltage)	VDC	12~48	12~48	12~48
(communication interface)	/	RS422/RS485/MODBUS/TCP/UDP/Industrial Ethernet/USB, etc		
(Cable specifications)	/	Φ7.5mm×5m		

- Some parameters are for the supporting signal acquisition module parameters Default support for 9-24VDC, 48VDC,
- please contact sales personnel. Accuracy includes measurement errors caused by factors such as crosstalk, hysteresis, and nonlinearity

Note: Used together with high precision data acquisition system



KDEV-D-F0B

Product characteristics

- Six-axis joint calibration, fully suppress crosstalk, small high-precision six-axis force sensor.
-

Mounting dimensions

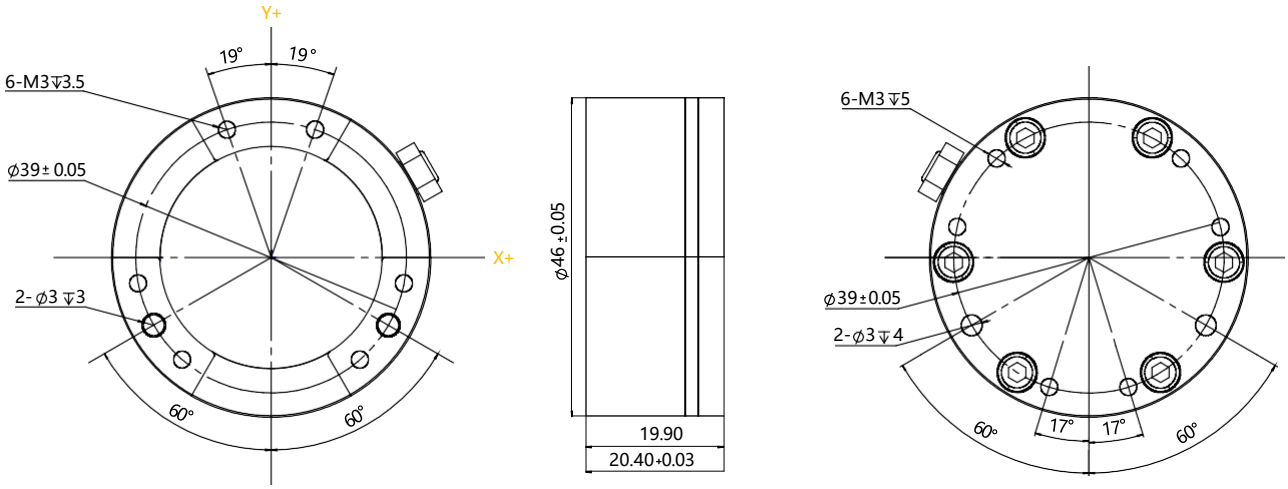

(performance parameters)		model		
		KDEV-D-F0A1	KDEV-D-F0B2	KDEV-D-F0B3
Fx,Fy	N	50	150	200
Fz	N	50	150	200
Mx,My	Nm	2	5	7
Mz	Nm	2	5	7
(Diameter)	mm	46	46	46
(Height)	mm	20.4	20.4	20.4
(Material)	/	Aluminum alloy	Aluminum alloy	Aluminum alloy
(Surface treatment)	/	Anodization	Anodization	Anodization
(Overload level)	%FS	300	300	300
(Resolution)	%FS	0.03	0.03	0.03
(Repetition accuracy)	%FS	0.1	0.1	0.1
(Accuracy)	%FS	0.5	0.5	0.5
(Weight)	kg	0.06	0.07	0.07
(Protection level)	/	Ip64	Ip64	Ip64
(Operating temperature)	℃	5~80	5~80	5~80
(sampling rate)	Hz	1000	1000	1000
(Supply Voltage)	VDC	12~48	12~48	12~48
(communication interface)	/	RS422/RS485/MODBUS/TCP/UDP/Industrial Ethernet/USB, etc		
(Cable specifications)	/	Φ7.5mm×5m		

- Some parameters are for the supporting signal acquisition module parameters . Default support for 9-24VDC, 48VDC,
- please contact sales personnel. Accuracy includes measurement errors caused by factors such as crosstalk, hysteresis,
- and nonlinearity

Note: Used together with high precision data acquisition system



KDEV-D- F0C

Product characteristics

- Six-axis joint calibration, fully suppress crosstalk, built-in high-precision embedded data acquisition and calculation system, using aviation alloy, high overload, both high stiness and high sensitivity.

- **Mounting dimensions**

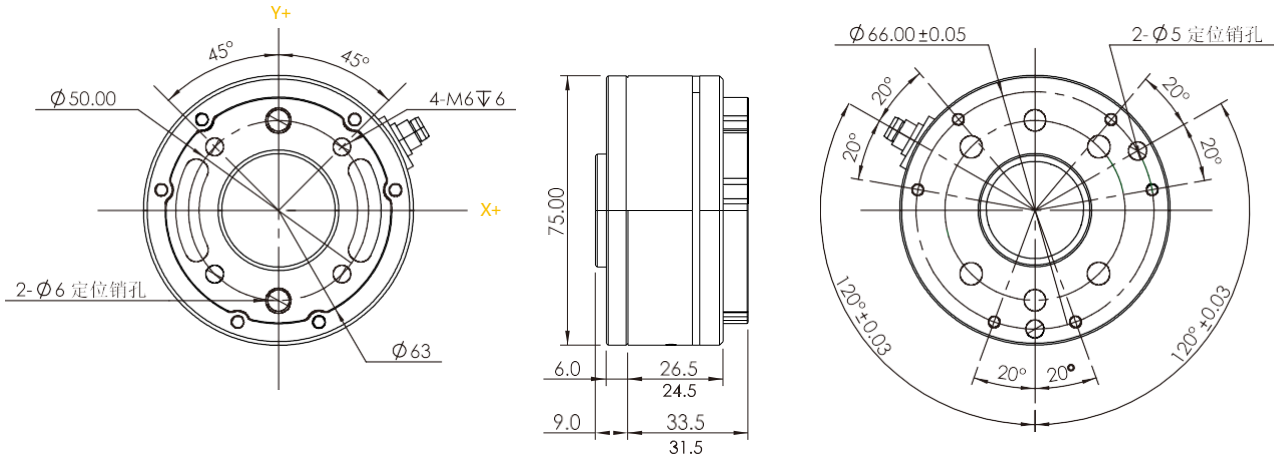

(performance parameters)		model					
		KDEV-D-F0C1	KDEV-D-F0C2	KDEV-D-F0C3	KDEV-D-F0C4	KDEV-D-F0C5	KDEV-D-F0C6
Fx,Fy	N	50	200	400	500	30	100
Fz	N	50	200	500	700	30	100
Mx,My	Nm	2	8	12	18	1.5	4
Mz	Nm	2	8	12	18	1.5	4
(Diameter)	mm	75	75	75	75	75	75
(Height)	mm	31.5	31.5	33.5	33.5	31.5	31.5
(Material)	/	aluminum alloy	aluminum alloy	aluminum alloy	aluminum alloy	aluminum alloy	aluminum alloy
(Surface treatment)	/	Anodization	Anodization	Anodization	Anodization	Anodization	Anodization
(Overload level)	%FS	300	300	300	300	300	300
(Resolution)	%FS	0.03	0.03	0.03	0.03	0.03	0.03
(Repetition accuracy)	%FS	0.1	0.1	0.1	0.1	0.1	0.1
(Accuracy)	%FS	0.5	0.5	0.5	0.5	0.5	0.5
(Weight)	kg	0.26	0.28	0.32	0.36	0.26	0.28
(Protection level)	/	Ip64	Ip64	Ip64	Ip64	Ip64	Ip64
(Operating temperature)	℃	0~80	0~80	0~80	0~80	0~80	0~80
(sampling rate)	Hz	1000	1000	1000	1000	1000	1000
(Supply Voltage)	VDC	12~48	12~48	12~48	12~48	12~48	12~48
(communication interface)	/	RS422/RS485/MODBUS/TCP/UDP/Industrial Ethernet/USB, etc					
(Cable specifications)	/	Φ7.5mm×5m					

- Default support for 9-24VDC, please contact sales for 48VDC
- Accuracy includes measurement errors caused by factors such as crosstalk, hysteresis, and nonlinearity
  Note: Used together with high precision data acquisition system

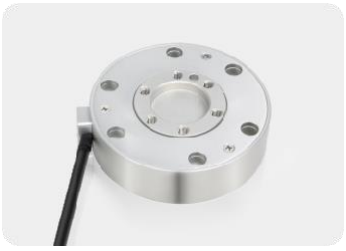

KDEV-D-F0D

Product characteristics

- Large bending moment range, six-axis joint calibration, fully suppress crosstalk, built-in high-precision embedded data acquisition and calculation system, using aviation alloy, high overload, both high stiffness and high sensitivity.

• Mounting dimensions

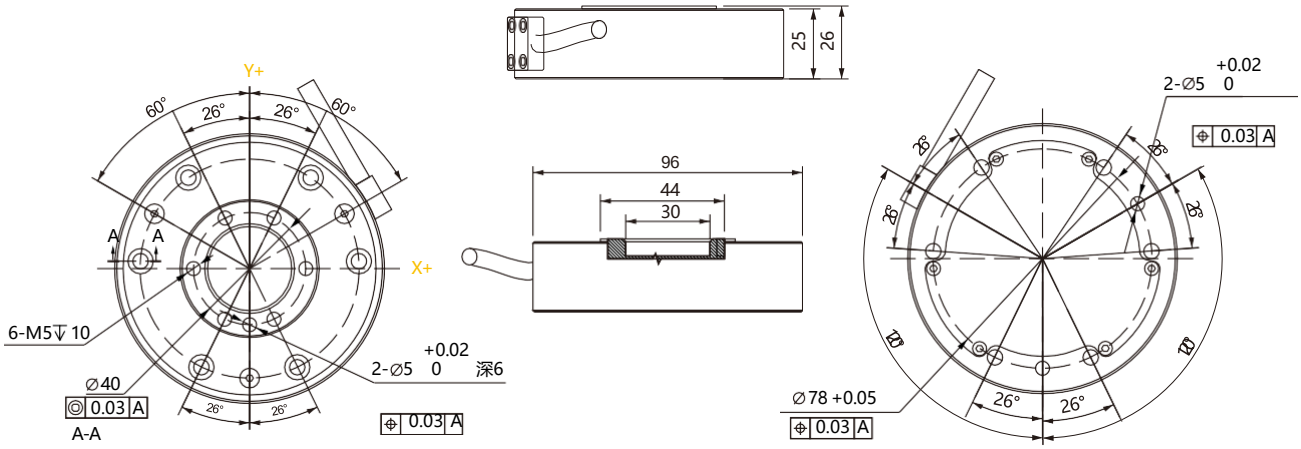

(performance parameters)		model				
		KDEV-D-F0C1	KDEV-D-F0C2	KDEV-D-F0C3	KDEV-D-F0C4	KDEV-D-F0C5
Fx,Fy	N	100	200	300	400	2000
Fz	N	200	400	600	800	2000
Mx,My	Nm	10	18	24	36	100
Mz	Nm	10	18	24	36	100
(Diameter)	mm	96	96	96	96	96
(Height)	mm	26	26	26	26	26
(Material)	/	aluminum alloy	aluminum alloy	aluminum alloy	aluminum alloy	aluminum alloy
(Surface treatment)	/	Anodization	Anodization	Anodization	Anodization	Anodization
(Overload level)	%FS	300	300	300	300	200
(Resolution)	%FS	0.03	0.03	0.03	0.03	0.05
(Repetition accuracy)	%FS	0.1	0.1	0.1	0.1	0.3
(Accuracy)	%FS	0.5	0.5	0.5	0.5	3
(Weight)	kg	0.32	0.32	0.36	0.36	1.6
(Protection level)	/	Ip64	Ip64	Ip64	Ip64	Ip64
(Operating temperature)	℃	0~80	0~80	0~80	0~80	0~80
(sampling rate)	Hz	1000	1000	1000	1000	1000
(Supply Voltage)	VDC	12~48	12~48	12~48	12~48	12~48
(communication interface)	/	RS422/RS485/MODBUS/TCP/UDP/Industrial Ethernet/USB, etc				
(Cable specifications)	/	Φ7.5mm×5m				

- Default support for 9-24VDC, please contact sales for 48VDC
- Accuracy includes measurement errors caused by factors such as crosstalk, hysteresis, and nonlinearity

Note: Used together with high precision data acquisition system