# Plastic bodied limit switch
Series C2

| Description **C2-A2Z O.M.** | Article number **6008801009** |
|---|---|

**Operating symbol**

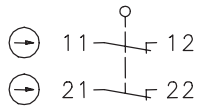


**Operating diagram**

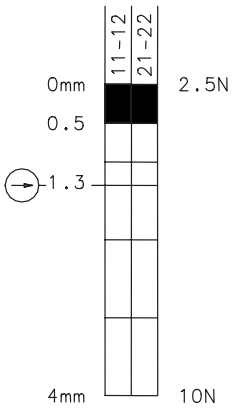


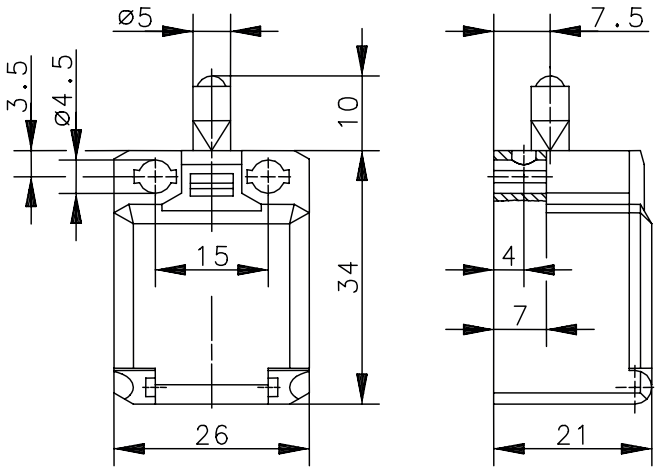


On Off

Tolerance:
Operating point ± 0,25 mm;
Operating force ± 10 %

| **Electrical Data** | | |
|---|---|---|
| Rated insulation voltage | $U_i$ | 250 V AC |
| Conv. thermal current | $I_{the}$ | 10 A |
| Rated operational voltage | $U_e$ | 240 V |
| Utilization category | | AC-15, $U_e/I_e$ 240 V / 3 A |
| Direct opening action | ⊖ | acc. to IEC/EN 60947-5-1, Annex K |
| Short-circuit protective device | | Fuse 6 A gG |
| Protection class | | II, totally insulated |

| Mechanical data | |
|---|---|
| Enclosure | Thermoplastic, glass fibre reinforced (UL 94-V0) |
| Cover | Thermoplastic |
| Actuator | Plunger (st) |
| Ambient air temperature | -30 °C ... +80 °C |
| Contact type | 2 NC (Zb) |
| Mechanical life | 3 x $10^6$ operating cycles |
| Switching frequency | ≤ 100 / min. |
| Assembly | 2 x M4 |
| Connection | 4 screw connections (M3,5) |
| Conductor cross-sections | Solid: 0,5 ... 1,5 $mm^2$ or<br>Litz wire with ferrules: 0,5 ... 1,5 $mm^2$ |
| Cable entrance | Rectangle 8,5 x 3,5 mm |
| Weight | ≈ 0,02 kg |
| Installation position | operator definable |
| Protection type | IP20 nach EN 60529; DIN VDE 0470 T1<br>IP30 bei voller Kontaktbelegung, mit Litzen deren Außendurchmesser ≥ 2,2 beträgt. |

| Actuation |
|---|
| The push bolt actuator is mainly intended to be actuated along its axis.<br>Side actuation will considerably reduce switch life.<br>The switch may not be used as a mechanical stop. |

| ID for safety engineering | |
|---|---|
| B10d | 6 x $10^6$ cycles |

| Standards | |
|---|---|
| | VDE 0660 T100, DIN EN 60947-1, IEC 60947-1 |
| | VDE 0660 T200, DIN EN 60947-5-1, IEC 60947-5-1 |
| | DIN EN ISO 13849-1 |

| EU Conformity | |
|---|---|
| | acc. to directive 2014/35/EU |

| Approvals | |
|---|---|
| | $_{c}CSA_{US}$, UL |
| | CCC |

| Notes |
|---|
| The specified protection classification (IP code) applies only when the cover is closed. |