MV100 Series Compact Drive

Quick Start and Installation Manual

Document Version:	V1.1
Archive Date:	2015/12/31
BOM Code:	R33010208

Shenzhen Kaidechang ElectronicTechnology Co..Ltd.

Address: Room 309, Wutong Space, No. 2123, BixinRoad. Lonaaana District. Shenzhen. China

Email: 3176708292@ qq.com / 13265873957@163.com

Contact person: Huang Gong Mobile number: +86-13265873957

Contact person: Xie Gong Mobile number: +86-18123659512

Foreword

Thank you for choosing the MV100 series compact drive of Shenzhen Megmeet Drive Technology Co., Ltd. MV100 drive with a new hardware design platform that integrates V / F control mode, provide excellent motor driving performance, this series of drive with excellent performance, perfect functions, compact structure, convenient installation, simple debugging, easy maintenance, is the cost-effective products for drive generic and OEM markets.

The relevant precautions during the installation, wiring, parameter setting and troubleshooting will be detailed in this manual. To ensure the correct installation and operation of the MV100 series drive as well as its high performance, please read carefully this user manual before installing the equipment. This manual shall be kept properly and delivered to the actual users of the drive.

Safety Precautions

DANGER	Operation without following instructions can cause death or severe personal injury.
WARNING	Operation without following instructions can cause medium or slight personal injury or damage to the product and other equipment.

DANGER

- Please install the product on the incombustible materials (e.g., metal), do not place any combustible material near the product, otherwise, fire may be caused.
- Do not install the product in the environment with explosive gas, otherwise, explosion may be caused.
- Only qualified personnel can wire the drive, Never wire the drive unless the input AC supply is completely disconnected
- The grounding terminal of the drive must be reliably grounded, do not operate the drive with wet hands, maintaince operation can not be conducted until 10 minutes has passed after disconnecting the power supply, the bare parts of the terminal lugs in the main circuit must be wrapped with insulation tape, otherwise, electric shock may be caused.
- When powering up the drive that has been stored for over 2 years, the input voltage must be gradually increased with the voltage regulator, otherwise, electric shock and explosion may be caused.
- Only qualified personnel can replace the components. Do not leave any wire or metal parts inside the drive, otherwise, fire may be caused.
- After changing the control board, the parameters must be properly set before operating the drive, otherwise, property damage may be caused.

⚠ WARNING

- Do not install the drive in the environment with water splash (e.g., near the water pipe), otherwise, you may suffer the property loss.
- Do not install and operate the drive if it is damaged or its components are not complete, otherwise, fire and human injury may be caused.
- Do not install the product in the place exposed to direct sunlight, otherwise, property damage may be caused.
- Do not short circuit terminal PB and terminal –DC or +DC, otherwise, fire and property damage may be caused.
- Cable lugs must be firmly connected to the terminals of main circuit, otherwise, property damage may be caused.
- Do not connect AC 220V input to the control terminals other than terminal TA, TB, TC otherwise, property damage may be caused.

Contents

MV100 Series Compact Drive 1
Chapter 1 Introduction of MV100 Drive 5
1. Product model and nameplate 5
2. Technical specifications of product 6
3. Outline, mounting dimensions and gross weight of drive 9
4.Outline and mounting dimensions of operation panel 10
Chapter 2 Wiring of Drive 11
5. Wiring and configuration of main circuit terminals 11
6. Wiring and configuration of control circuit 14
Chapter 3 Operating Panel 16
Chapter 4 Parameter List 17
Chapter 5 Troubleshooting 35

Chapter 1 Introduction of MV100 Drive

1.1 Product model and nameplate

Product model

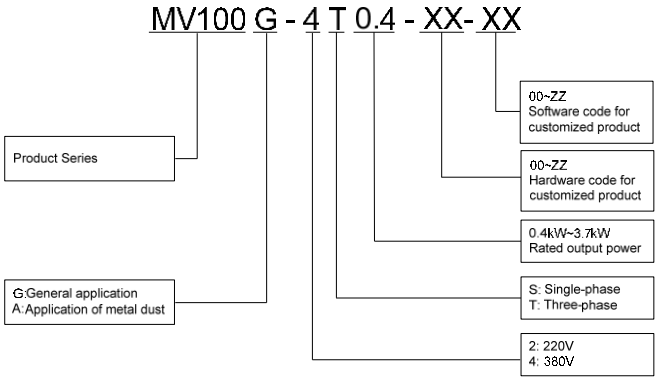

Product nameplate

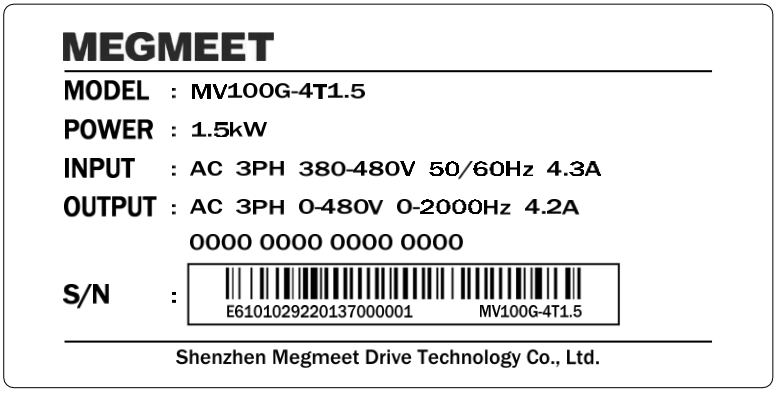

1.2 Technical specifications of product

Various series power specifications

Table 1-1 Three-phase 380V series power specifications

Three-phase 380V series						
Drive model		MV100A-4T0.4	MV100G-4T0.75 MV100A-4T0.75	MV100G-4T1.5 MV100A-4T1.5	MV100G-4T2.2 MV100A-4T2.2	MV100G-4T3.7
Applicable motor power		0.4kW	0.75kW	1.5kW	2.2kW	3.7kW
Applicable motor power		0.5HP	1HP	2HP	3HP	5HP
Input power	Input current	1.9A	3.2A	4.3A	7.1A	11.2A
	Rated voltage	Three-phase 380~480V				
	Voltage fluctuation range	±10%(342~528V)				
	Rated frequency	50Hz/60Hz				
	Frequency fluctuation range	±5%(47~63Hz)				
Output	Rated output capacity	1.2kVA	2kVA	3.3kVA	4.4kVA	6.8kVA
	Rated output current	1.5A	2.5A	4.2A	5.5A	8.5A
	Output voltage	0 ~ the corresponding three-phase input voltage, the error is less than ± 3%				
	Output frequency range	V/F: 0.0~2000.0Hz (unit: 0.1Hz)				
	Carrier frequency	0.7~15kHz				
	Overload capacity	1 min for 150% rated current, 0.5 s for 200% rated current				
Cooling mode		Forced air cooling				

Table 1-2 Single-phase 220V series power specifications

Single-phase 220V series					
Drive model		MV100G-2S0.4[1]	MV100G-2S0.75[1]	MV100G-2S1.5	MV100G-2S2.2
Applicable motor power		0.4kW	0.75kW	1.5kW	2.2kW
Applicable motor power		0.5HP	1HP	2HP	3HP
Input power	Input current	6.5A	9.7A	15.4A	24A
	Rated voltage	Single-phase 200~240V			
	Voltage fluctuation range	±10%(180~264V)			
	Rated frequency	50Hz/60Hz			
	Frequency fluctuation range	±5%(47~63Hz)			
Output	Rated output capacity	1kVA	1.6kVA	2.9kVA	4.2kVA
	Rated output current	2.5A	4.2A	7.5A	11A
	Output voltage	0 ~ the corresponding three-phase input voltage, the error is less than ± 3%			
	Output frequency range	V/F: 0.0~2000.0Hz (unit: 0.1Hz)			
	Carrier frequency	0.7~15kHz			
	Overload capacity	1 min for 150% rated current, 0.5 s for 200% rated current			
Cooling mode		Forced air cooling			

Note: 1 means being developed

Table 1-3 Three-phase 220V series power specifications

Three-phase 380V series					
Drive model		MV100G-2T0.4[1]	MV100G-2T0.75[1]	MV100G-2T1.5	MV100G-2T2.2
Applicable motor power		0.4kW	0.75kW	1.5kW	2.2kW
Applicable motor power		0.5HP	1HP	2HP	3HP
Input power	Input current	2.7A	5.1A	9A	15A
	Rated voltage	Three-phase 200~240V			
	Voltage fluctuation range	±10%(180~264V)			
	Rated frequency	50Hz/60Hz			
	Frequency fluctuation range	±5%(47~63Hz)			
Output	Rated output capacity	1kVA	1.6kVA	2.9kVA	4.2kVA
	Rated output current	2.5A	4.2A	7.5A	11A
	Output voltage	0 ~ the corresponding three-phase input voltage, the error is less than ± 3%			
	Output frequency range	V/F: 0.0~2000.0Hz (unit: 0.1Hz)			
	Carrier frequency	0.7~15kHz			
	Overload capacity	1 min for 150% rated current, 0.5 s for 200% rated current			
Cooling mode		Forced air cooling			

Note: 1 means being developed

Control Specifications

Table 1-4 Control Specifications

Operation control features	Control mode	V/F control without PG
	Maximum output frequency	2000.0Hz
	Speed adjusting range	1: 100
	Speed control precision	±0.5%
	Speed fluctuation	±0.3%
	Startup torque	150% @ 0.5Hz
Product functions	Key functions	Torque limit, multi-stage speed operation, auto-tuning, skip frequency operation, PID adjustment, non-stop upon instantaneous power interruption, switching of multi-command, MODBUS communication, automatic restart, DC braking, dynamic braking, dwell function
	Basic frequency	0.1Hz~2000.0Hz
	Startup frequency	0.0Hz~60.0Hz
	Frequency setting mode	Digital panel setting, terminal UP/DN setting, host device communication setting, analog setting (AI1/AI2/), terminal pulse setting
	Acceleration/deceleration time	0.1~3600.0 (unit can be selected among 0.1s, s and min)

	Dynamic braking capacity	Built-in braking unit, braking rate 0.0~100.0%
	DC braking capacity	Initial frequency: 0.00Hz~60.00Hz Braking time: 0.1s~30.0s Braking current: 0%~100%
Protection function	Overcurrent, overvoltage, undervoltage , overheat , overload protection, etc.	
Others	Efficiency	≥93%
	Installation method	Wall-mounted
	Protection degree	IP20
	Cooling mode	Air cooling
Environment	Operating site	Indoor, away from direct sunlight, free from corrosive gas, combustible gas, oil mist, water vapor, water dripping or salt
	Altitude	Used at the place lower than 1000m, (derated at the place above 1000m, derated 1% for every increase of 100m)
	Ambient temperature	-10℃~+40℃ (derated when used in the ambient temperature of 40℃~50℃)
	Humidity	5%~95%RH, non-condensing
	Vibration	less than 5.9m/s2(0.6g)
	Storage temperature	-40℃~+70℃

1.3 Outline, mounting dimensions and gross weight of drive

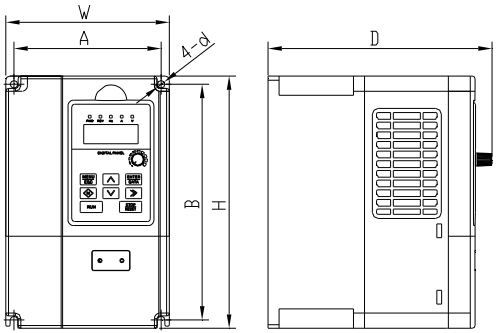

Fig. 1-1 Outline, mounting dimensions for products

Table 1-5 Outline, mounting dimensions and gross weight

Enclosure model	A（mm）	B（mm）	H（mm）	W（mm）	D（mm）	Diameter of mounting aperture (mm)	Gross weight ±0.5 (kg)
G1R1	78	137	147	88	163	4.5	1.3
G1R2	107	171	183	119	163	5.5	2

Table 1-6 Model list

Series	0.4kW	0.75kW	1.5kW	2.2kW	3.7kW
Three-phase 380V		MV100G-4T0.75	MV100G-4T1.5	MV100G-4T2.2	MV100G-4T3.7
	MV100A-4T0.4	MV100A-4T0.75	MV100A-4T1.5	MV100A-4T2.2	
Single-phase 220V	MV100G-2S0.4[1]	MV100G-2S0.75[1]	MV100G-2S 1.5	MV100G-2S2.2	
Three-phase 220V	MV100G-2T0.4[1]	MV100G-2T0.75[1]	MV100G-2T1.5	MV100G-2T2.2	

Note: In the table 1-6 without shading part of the product corresponding enclosure model G1R1, with shading part of the product corresponding enclosure model G1R2.

Note: 1 means being developed

1.4 Outline and mounting dimensions of operation panel

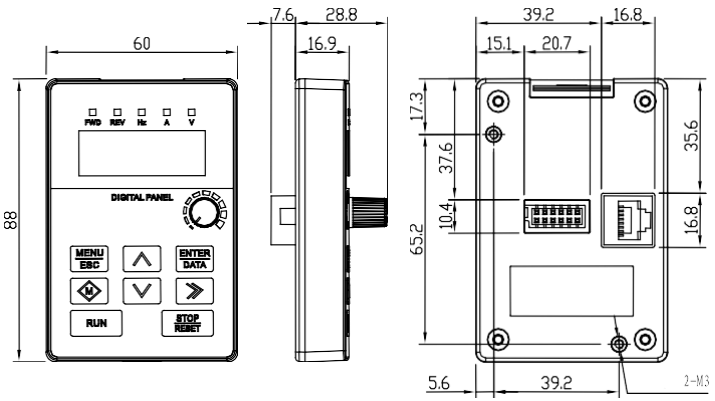

Fig. 1-2 Outline and mounting dimensions of operation panel

Chapter 2 Wiring of Drive

2.1 Wiring and configuration of main circuit terminals

Terminal type 1

Applicable models: Three-phase 380V or 220V Series

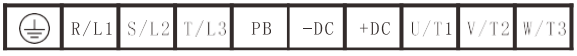

Terminal type 2

Applicable models: Single-phase 220V Series



Terminal	Function
R/L1,S/L2,T/L3	Three-phase AC 380Vor 220V input terminals
L N	Single-phase AC 220V input terminals
+DC	DC positive bus output terminal
+DC PB	Reserved terminals for an external braking resistor (configuration information of built-in braking unit refer to Table 1-6)
-DC	DC negative bus output terminals
U/T1,V/T2,W/T3	Three-phase AC output terminals
⏚	Safety grounding terminal

Recommended fuse capacity and cross section area of the copper-cored insulation wire

Table 2-1 Recommended fuse capacity and cross section area of the copper-cored insulation wire

Series	Drive model	MCCB circuit breaker (A)	Main circuit (mm^2)				Control circuit (mm^2)
			Input wire	Brake wire	Output wire	Ground wire	
Three-phase 380V	MV100A-4T0.4	10	1.0	1.0	1.0	2.5	1
	MV100G-4T0.75,MV100A-4T0.75	10	1.0	1.0	1.0	2.5	1
	MV100G-4T1.5,MV100A-4T1.5	16	1.5	1.0	1.5	2.5	1
	MV100G-4T2.2,MV100A-4T2.2	16	1.5	1.5	1.5	2.5	1
	MV100G-4T3.7	25	2.5	1.5	2.5	2.5	1
Single-phase 220V	MV100G-2S0.4[1]	16	1.5	1.0	1.0	2.5	1
	MV100G-2S0.75[1]	20	2.5	1.0	1.0	2.5	1
	MV100G-2S1.5	32	4	1.5	2.5	4	1
	MV100G-2S2.2	50	6	1.5	2.5	6	1
Three-phase 220V	MV100G-2T0.4[1]	16	1	1.0	1.0	2.5	1
	MV100G-2T0.75[1]	16	1.5	1.0	1.0	2.5	1
	MV100G-2T1.5	20	2.5	1.5	2.5	2.5	1
	MV100G-2T2.2	20	4	1.5	2.5	4	1

Note: 1 means being developed

Recommended braking resistor specifications

Braking resistor connected between PB and + DC, the selection is as shown in the following table.

Table 2-2 Recommended braking resistor specifications and configuration

Series	Drive model	Specification	Utilization (%)	Braking torque (%)	Maximum continuous use time (s)
Three-phase 380V	MV100A-4T0.4	400Ω/300W	10	100	10
	MV100G-4T0.75，MV100A-4T0.75	400Ω/300W	10	100	10
	MV100G-4T1.5，MV100A-4T1.5	300Ω/500W	10	100	10
	MV100G-4T2.2，MV100A-4T2.2	200Ω/650W	10	100	10
	MV100G-4T3.7	125Ω/1000W	10	100	10
Single-phase 220V	MV100G-2S0.4[1]	150Ω/180W	10	100	10
	MV100G-2S0.75[1]	100Ω/250W	10	100	10
	MV100G-2S1.5	70Ω/400W	10	100	10
	MV100G-2S2.2	50Ω/600W	10	100	10
Three-phase 220V	MV100G-2T0.4[1]	150Ω/180W	10	100	10
	MV100G-2T0.75[1]	100Ω/250W	10	100	10
	MV100G-2T1.5	70Ω/400W	10	100	10
	MV100G-2T2.2	50Ω/600W	10	100	10

Note: 1 means being developed

Wiring for basic operation

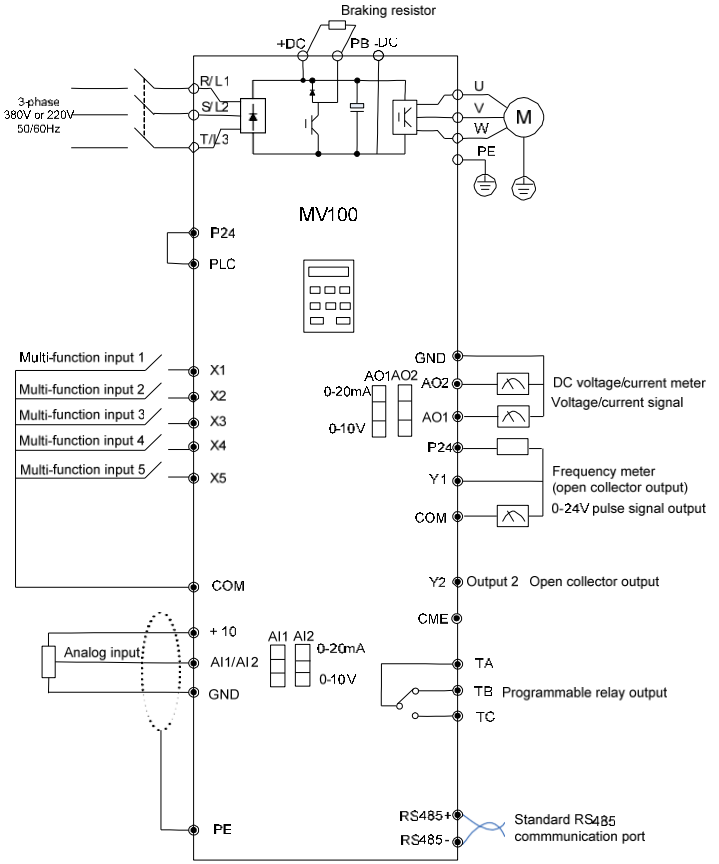

Fig. 2-1 Basic wiring diagram 1

Fig. 2-1 applicable models: Three-phase 380V or 220V series

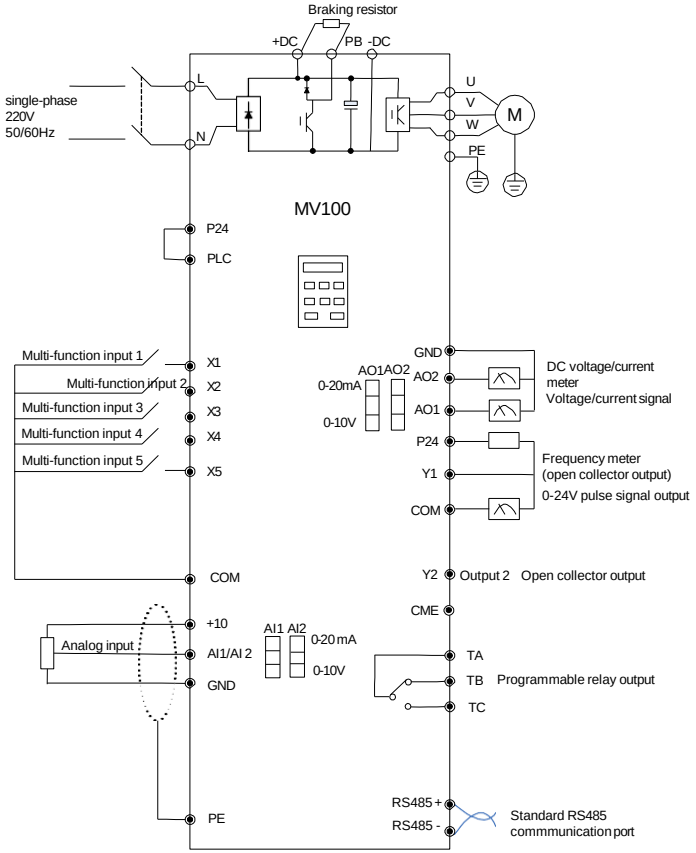

Fig. 2-2 Basic wiring diagram 2

Fig. 2-2 applicable models: single-phase 220V series

Note:"○" in the figure is main circuit terminal and " ◉ " in the figure is control circuit terminal.

2.2 Wiring and configuration of control circuit

The arrangement sequence diagram of the control circuit terminals

AI1	AI2	AO1	X1	X2	X3	X4	X5	Y1	Y2
+10	GND	AO2	+RS485-	COM	PLC	P24	CME	COM	

TA	TA
	TB	TC

Wiring of control circuit terminals

It is suggested to use the wire with cross section area over 1mm^2 as the connecting wire of the control circuit terminals.

Control terminal function

Table 2-3 Control terminal function

Terminal	Function	Specifications and others
GND	The reference ground for +10 V power, analog signals and communication signals	Internal isolated with COM
+10	To provide +10V reference power for external load(reference grounding: GND)	Allowable maximum output current: 10mA
AI1	Analog input, voltage/current is selected via the jumper(reference grounding: GND)	Input voltage range:0~10V (input resistance: 20kΩ)
AI2		Input current range: 0~20mA (input resistance: 246Ω)
AO1	Analog output, voltage/current is selected via the jumper(reference grounding: GND)	Voltage output range: 0/2~10V
AO2		Current output range: 0/4~20mA
+RS485-	RS485 communication interface, differential signal (reference grounding: GND)	"+" Indicates the positive end, "-" indicates the negative end, use twisted pair wire or shielded wire.
COM	The reference ground for 24V power, multi-function input	Internal isolated with GND, CME
P24	To provide +24V power for external load(reference grounding: GND)	Maximum output current: 200mA
X1	High-speed pulse multi-function inputs, opto-isolated inputs (common terminal: PLC).	Input resistance: R=2kΩ Maximum input frequency: 100kHz Input voltage range: 20V~30V
X2	Common signal multi-function input, opto-isolated inputs (common terminal: PLC or COM).	Input resistance: R=3.1kΩ Maximum input frequency: 200kHz Input voltage range: 10V~30V
X3		
X4		
X5		
PLC	Multi-function input terminal common terminal	Short with P24 upon delivery Common terminal for X1~X5, internal isolated with P24
CME	Multi-function output common terminal	Internal isolated with COM、PLC、GND
Y1	Open collector output terminal 1 / DO pulse output terminal(common terminal: COM)	Opto-isolated output Maximum operating voltage: 30V Maximum output current: 50mA The DO pulse output frequency range depends on P09.23 and the maximum value is 50kHz
Y2	Open collector output terminal 2(common terminal: CME)	Opto-isolated output Maximum operating voltage: 30V Maximum output current: 50mA
TA	Relay output	TA-TB: normally closed; TA-TC: normally open Contact capacity: AC 250V/2A（COSΦ＝1） AC 250V/1A（COSΦ＝0.4） DC 30V/1A
TB		
TC		

Chapter 3 Operation Panel

Panel appearance

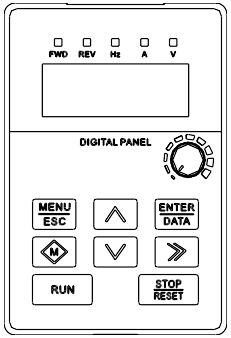

Fig. 3-1 Panel appearance

Panel function description

Table 3-1 Panel function description

Panel structure	Panel function name and description of each part
Keys	MENU/ESC: Program/exit key ∧: Increase key ENTER/DATA: Function/data key M:Multi-functional key ∨: Decrease key 》: Shift key RUN: Run key STOP/RESET: Stop/reset key
Digital tube	Display the function code number and content or other parameters
Potentiometer	Run frequency setting
Status lights	FWD: forward indicator REV: Reverse Indicator
Unit lights	Hz: Frequency Indicator A: Current indicators V:Voltage Indicator

Panel operation example

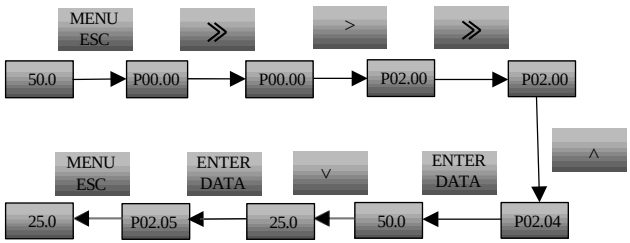

Fig. 3-2 Operation example for setting the set frequency

Chapter 4 Parameter List

Explanation to the terms in the function code parameter table

Table field	Explanation
Function code number	Representing the number of the function code, e.g. P00.00
Function code name	Name of the function code, explaining it
Leave-factory value	The value of the function code after restoring the leave-factory settings
Set range	The minimum and maximum values of the function code allowed to set
Unit	V: voltage; A: current; ℃: temperature; Ω: resistance; mH: inductance; rpm: rotate speed; %: percentage; bps: baud rate; Hz/ kHz: frequency; ms/s/min/h/kh: time; kW: power
Property	○: Means the function code can be changed during running; ×: Means the function code can be changed in the stop state; *: Means the function code can be read only, can not be changed

Basic menu function code parameter table

Function code	Name	Setting range	Default value
Group P00: System management			
P00.00	User password	0: No password Other: Password protection	0
P00.01	Parameter protection	0: All the data can be changed; 1: Only the main set frequency (digital setting P02.04) and this function code can be changed 2: Only this function code can be changed	1
P00.02	Parameter initialization	0: Parameter changing status 1: Clear fault memory information 2: Restore to leave-factory value	0
P00.03	Parameter copy	0: Disabled 1: Uploading parameter 2: Downloading parameters 3: Downloading parameters (except the motor parameters) Note: The drive parameters will not be uploaded/downloaded	0
P00.04	Selection of key functions	Unit place: Manufacturer commissioning Tens place: Function selection of the STOP/RESET key 0: The STOP key is valid only in the panel control mode 1: The STOP key is valid in all control modes Note: The RESET key is valid in any control mode Hundreds place: Function selection of M key 0: No function 1: JOG 2: FWD/REV 3: Command channel switching 1 (valid only in stop status) 4: Command channel switching 2 (valid both in stop & running status) 5: Panel locking function Thousands place: Panel locking function	0100H

Function code	Name	Setting range	Default value
		0: Lock all the keys 1: Lock all the keys except the STOP key 2: Lock all the keys except the >> key 3: Lock all the keys except the RUN & STOP key	
P00.05	LED display parameter selection 1 when running	Binary setting: 0: No display; 1: Display Unit place of LED: BIT0: Output frequency (Hz) BIT1: Preset frequency (Hz ,flashing) BIT2: Output current (A) Tens place of LED: BIT0: Running rotating speed (r/min) BIT1: Set rotating speed (r/min, flashing) BIT2: Running line speed（m/s） BIT3: Preset line speed (m/s, flashing) Hundreds place of LED: BIT0: Output power BIT1: Output toque (%) Note: the default display shall be output frequency when all the parameters are 0	007H
P00.06	LED display parameter selection 2 when running	Binary setting: 0: No display; 1: Display Unit place of LED: BIT0: Output voltage (V) BIT1: AI1（V） BIT2: AI2（V） BIT3: Reserved Tens place of LED: BIT0: Analog closed loop feedback (%)	00H

Function code	Name	Setting range	Default value
		BIT1: Analog closed loop reference (%, flashing) BIT2: Terminal status (without unit) BIT3: DC bus voltage	
P00.07	LED display parameter selection when stop	Binary setting: 0: No display; 1: Display Unit place of LED: BIT0: Preset frequency (Hz) BIT1: Running speed (r/min) BIT2: Preset speed (r/min) BIT3: DC bus voltage (V) Tens place of LED: BIT0: Running line speed (m/s) BIT1: Preset line speed (m/s) BIT2: Analog closed loop feedback (%) BIT3: Analog closed reference (%) Hundreds place of LED: BIT0: AI1 (V) BIT1: AI2 (V) BIT2: Reserved BIT3: Terminal status (without unit) Note: The default display shall be set frequency when all the parameters are 0	009H
Group P01: Status display parameters			
P01.00	Main reference frequency channel	0: Disabled 1: Digital reference 1: Keyboard ∧∨ reference 2: Digital reference 2: Terminal UP/DN reference 3: Digital reference 3:Serial port	0

Function code	Name	Setting range	Default value
		communication reference 4: AI analog reference 5: Terminal PULSE reference 6: Panel potentiometer reference 7: Process closed loop PID	
P01.01	Main reference set frequency	-2000.0~2000.0Hz	0.0
P01.02	Auxiliary reference set frequency	-2000.0~2000.0Hz	0.0
P01.03	Set frequency	-2000.0~2000.0Hz	0.0
P01.04	Output frequency	-2000.0~2000.0Hz	0.0
P01.05	Output voltage	0~480V	0
P01.06	Output current	0.0~3Ie	0.0
P01.07	Output torque	-300.0~+300.0%	0.0
P01.08	Motor power	0.0%~200.0% (relative to the rated power of the motor)	0.0
P01.09	Bus voltage	0~800V	0
P01.10	Operation state of the drive	0~7FFFH: Bit 0: RUN/STOP Bit 1: REV/FWD Bit 2: Running at zero speed Bit 3: Accelerating Bit 4: Decelerating Bit 5: Running at constant speed Bit 6: Reserved	0

Function code	Name	Setting range	Default value
		Bit 7: Tuning Bit 8: Over-current limiting Bit 9: DC over-voltage limiting Bit 10: Torque limiting Bit 11: Speed limiting Bit 12: Drive in fault Bit 13: Speed control	
P01.11	State of digital input terminal	0~FFH, 0: off; 1: on The high-speed pulse reference will not be refreshed synchronously	00
P01.12	State of digital output terminal	0~FH, 0: open; 1: close The high-speed pulse output will not be refreshed synchronously	0
P01.13	AI1 input voltage	0.00~0.00V	0.00
P01.14	AI2 input voltage	0.00~10.00V	0.00
P01.15	AO1 output	0.0~100.0% (percentage relative to the full range)	0.0
P01.16	AO2 output	0.0~100.0% (percentage relative to the full range)	0.0
P01.17	Torque reference	-300.0%~300.0% (relative to the rated torque of the motor)	0.0
P01.18	X1 terminal pulse frequency reference	0.0~100.0kHz	0.0
P01.19	Radiator 1 temperature	-40.0~100.0℃	0.0

Function code	Name	Setting range	Default value
P01.20	Accumulated power-on hours	0 ~ maximum 65535 hours	0
P01.21	Accumulated running hours	0 ~ maximum 65535 hours	0
Group P02: Basic parameters			
P02.00	Control mode	1: V/F control without PG	1
P02.01	Running command channel selection	0: Keyboard control 1: Terminal control 2: Communication control	0
P02.02	Running direction setting	0: Forward running; 1: Reverse running	0
P02.03	Main reference frequency source selection	0: Digital reference 1: Keyboard ∧∨ reference 1: Digital reference 2: Terminal UP/DN reference 2 : Digital reference 3:Serial port communication reference 3: AI analog reference 4: Terminal PULSE reference 5: Panel potentiometer reference 6: Process closed loop PID	0
P02.04	Digital setting of main reference frequency	P02.14~P02.13	50.0
P02.05	Main & auxiliary reference digital frequency control	Unit place of LED: Main digital frequency saving control 0: Save when power down 1: Do not save when power down Tens place of LED: Main digital frequency control when stop 0: Maintained when stop 1: Reset P02.04 when stop Hundreds place of LED: Auxiliary digital frequency saving control 0: Save when power down 1: Do not save when power down Thousands place of LED: Auxiliary digital frequency control when stop 0: Maintained when stop 1: Reset when stop Note: The unit and tens places are only applicable for P02.03=0, 1, 2 hundreds and thousands place are only applicable for P02.06=1, 2, 3	0000H
P02.06	Auxiliary reference frequency source selection	0: No auxiliary reference 1: Digital reference 1: Keyboard ∧∨ reference 2: Digital reference 2: Terminal UP/DN reference 3: Digital reference 3: Serial port communication reference 4: AI analog reference 5: Terminal PULSE reference 6: Panel potentiometer reference 7: Process closed loop PID	0

Function code	Name	Setting range	Default value
P02.07	Digital setting of auxiliary reference	0.0~2000.0Hz	0.0
P02.08	Main/auxiliary reference calculation	0: + 1: -	0
P02.09	Acceleration time	0.0~3600.0	6.0
P02.10	Deceleration time	0.0~3600.0	6.0
P02.11	Unit of acceleration/deceleration time	0: 0.1s 1: s 2: min	1
P02.12	Maximum output frequency	MAX{50.0, upper limit frequency P02.13}~ 2000.00Hz	50.0
P02.13	Upper limit frequency	P02.14~P02.12	50.0
P02.14	Lower limit frequency	0.0~P02.13	0.0
P02.15	Upper limit of skip frequency	P02.16~2000.0	0.0
P02.16	Lower limit of skip frequency	0.0~P02.15	0.0
P02.17	Jog acceleration /deceleration time	0.1~60.0s	6.0
P02.18	Jog interval	0.0~100.0s	0.0
P02.19	Frequency of jog running	0.1~50.0Hz	5.0
Group P03: Motor parameters			
P03.00	Rated power of motor	0.1~999.9kW	Depending on model
P03.01	Rated voltage of motor	0~ rated voltage of drive（P98.05）	Depending on model
P03.02	Rated current of motor	0.1~999.9A	Depending on model
P03.03	Rated frequency of motor	1.0~2000.0Hz	Depending on model
P03.04	Rated rotating speed of motor	0~60000rpm	Depending on model
P03.05	Power factor of motor	0.001~1.000 It shall be used when calculating the motor parameters with the nameplates	Depending on model
P03.06	Stator resistance of motor %R1	0.00%~50.00%	Depending on model
P03.07	Leakage inductance of motor %X	0.00%~50.00%	Depending on model
P03.08	Rotator resistance of motor %R2	0.00%~50.00%	Depending on model
P03.09	Mutual	0.0%~2000.0%	Depending

Function code	Name	Setting range	Default value
	inductance of motor %Xm		on model
P03.10	No-load current (I_0) of motor	0.1~999.9A	Depending on model
P03.11	Overload protection factor of motor	20.0%~110.0% Set action level (%) = motor rated current/ drive rated current × 100 Low speed compensation actual action level = set action level × (output frequency/ 30HZ × 45 + +55) Actual converted current of overload protection = sampling current/overload protection action level	100.0
P03.12	Parameter auto-tuning	0: Disabled 1: Enabled (motor in static status) 2: Enabled (motor in rotate status) 3: Reserved (according to the nameplate setting)	0
Group P07: VF control parameters			
P07.00	Motor V/F curve setting	0: User-customized V/F curve 1: 2 times power curve 2: 1.7 times power curve 3: 1.2 times power curve	0
P07.01	Motor V/F frequency 2	P07.03~P02.12	0.0
P07.02	Motor V/F voltage 2	P07.04~100.0%	0.0
P07.03	Motor V/F	0.0~P07.01	0.0
	frequency 1		
P07.04	Motor V/F voltage 1	0.0~P07.02	0.0
P07.05	Motor torque increase	0.0%~30.0%	0.0
P07.06	Motor torque increase cut-off point	0.0%~50.0%（corresponds to P03.03）	10.0
P07.07	Motor stable factor	0~255	10
P07.08	AVR function	0: Disabled 1: Always enabled 2: Disabled only in deceleration situation	2
Group P08: Start and stop control parameters			
P08.00	Startup mode	0: Start from the startup frequency 1: Start from the startup frequency after braking	0
P08.01	Startup frequency	0.0~MIN（P02.13,60.0）	0.0
P08.02	Startup frequency retention time	0.00~10.00s	0.00
P08.03	Startup DC braking current	0.0% ~ 100.0% of the rated current of the drive	0.0
P08.04	Startup DC braking time	0.00 (Disabled) 0.01~30.00s	0.00
P08.05	Stop mode	0: Decelerate to stop 1: Coast to stop	0

Function code	Name	Setting range	Default value
		2: Decelerate to stop + DC braking	
P08.06	Stop frequency detection	0.0~150.0Hz	0.5
P08.07	Stop frequency detection retention time	0.00~10.00s	0.00
P08.08	Stop speed detection mode	0: Speed set value (the only one detection mode under the V/F mode) 1: Speed detection value	1
P08.09	Initial frequency for stop DC braking	0.0~MIN（P02.13,60.0）	0.0
P08.10	Waiting time for stop DC braking	0.00~10.00s	0.00
P08.11	Stop DC braking current	0.0% ~ 100.0% of the rated current of the drive	0.0
P08.12	Stop DC braking time	0.0 (Disabled) 0.01~30.00s	0.00
P08.13	Selecting restart function upon power fault	0: Disabled 1: Enabled	0
P08.14	Waiting time for restart	0.0~3600.0s	0.0

Function code	Name	Setting range	Default value
	upon power fault		
P08.15	Anti-reverse selection	0: Reverse operation is allowed 1: Reverse operation is prohibited (run at zero frequency upon reverse running command)	0
P08.16	Use ratio of dynamic braking	0.0~100.0%	0.0
P08.17	Braking startup voltage	380V Model: 700~780V	750
		220V Model: 330~370V	350
Group P09: Digital input/output parameters			
P09.00	Function selection of input terminals X1	0: No function 1: Forward running (FWD) 2: Reverse running (REV) 3: External jog forward running control input 4: External jog reverse running control input 5: Three-wire operation control 6: Multi-frequency terminals 1 7: Multi-frequency terminals 2 8: Multi-frequency terminals 3 9: Multi-frequency terminals 4 10~11: Reserved 12: Main reference frequency pulse input (valid only for X1) 13: Auxiliary reference frequency pulse	1
P09.01	Function selection of input terminals X2		2
P09.02	Function selection of input terminals X3		0
P09.03	Function selection of input terminals X4		0

Function code	Name	Setting range	Default value
P09.04	Function selection of input terminals X5	input (valid only for X1) 14: Frequency increase command (UP) 15: Frequency decrease command (DN) 16: External fault normally open input 17: External fault normally closed input 18: External interrupt normally open contact input 19: External interrupt normally closed contact input 20~21: Reserved 22: External reset (RESET) input 23: Coast to stop input (FRS) 24: Acceleration/deceleration disable command 25: Stop DC braking input command 26~28: Reserved 29:Closed-loop disabled 30~33: Reserved 34: Main reference frequency source selection 1 35: Main reference frequency source selection 2 36: Main reference frequency source selection 3 37: Switching main reference frequency to AI 38: Command source selection 1 39: Command source selection 2 40: Switching command to terminal 41: FWD disabled	0

Function code	Name	Setting range	Default value
		42: REV disabled 43: Drive running disabled 44: External stop command (it is valid for all the control modes, the device will be stopped in accordance with the current stop mode) 45: Auxiliary reference frequency reset 46: Reserved 48~52: Reserved 54~59: Reserved 60: Emergency stop 61~73: Reserved 74: PID reference frequency pulse input (valid only for X1) 75: PID feedback frequency pulse input (valid only for X1)	
P09.05	FWD/REV running mode setting	0: Two-wire control mode 1 1: Two-wire control mode 2 2: Three-wire running control 1 3: Three-wire running control 2	0
P09.06	Terminal UP/DN acceleration/deceleration rate	0.01~99.99Hz/s	1.00
P09.07	Terminal filtering time	0~500ms	10
P09.08	Maximum input pulse frequency	0.1~100.0kHz	10.0

Function code	Name	Setting range	Default value
P09.09	Pulse reference central point selection	0: Without central point 1: With central point, it is (P09.08)/2. It is positive when the frequency is less than the central point frequency 2: With central point, it is (P09.08)/2. It is positive when the frequency is larger than the central point frequency	0
P09.10	Pulse reference filtering time	0.00~10.00s	0.05
P09.11	Input terminal enabled status setting	Binary setting: 0: Normal logical, enabled upon connection 1: Inverted logical, enabled upon disconnection Unit place of LED: BIT0~BIT3: X1~X4 Tens place of LED: BIT0~BIT3: X5	00H
P09.12	Virtual input terminal setting	Binary setting: 0: Disabled 1: Enabled Unit place of LED: BIT0~BIT3: X1~X4 Tens place of LED: BIT0~BIT3: X5	00H
P09.13	Output selection of Multi-function al output terminal Y1	0: Open collector output terminal Y1 1: DO terminal output	0
P09.14	Open collector output terminal Y1	0: Drive in running state signal (RUN) 1: Frequency arrival signal (FAR) 2: Reserved 3: Frequency level detection signal (FDT) 4: Reserved 5: Overload detection signal (OL) 6: Lockout for under-voltage (LU) 7: External fault stop (EXT) 8: Frequency upper limit (FHL) 9: Frequency lower limit (FLL) 10: Drive running at zero-speed 11～14: Reserved 115: Drive ready for running (RDY) 16: Drive fault 17: Host device switch signal 18~19: Reserved 20: Drive FWD/REV indication terminal 21~24: Reserved	0
P09.15	Open collector output terminal Y2		1
P09.16	Relay R1 output function selection		15
P09.17	Output terminal enabled status setting	Binary setting: 0: Enabled upon connection 1: Enabled upon disconnection Unit place of LED: BIT0~BIT3:Y1、Y2、R1	0
P09.18	Relay R output delay	0.1~10.0s	0.1
P09.19	Frequency	0.0~P02.13	2.5

Function code	Name	Setting range	Default value
	arrival (FAR) detection width		
P09.20	FDT level upper limit	P09.21~P02.13	50.0
P09.21	FDT level lower limit	0.0~P09.20	49.0
P09.22	DO terminal output	0: No function 1: Output frequency 2: Set frequency (0~Maximum output frequency) 3: Output current Iei (0~2 * Iei) 4: Output current Iem (0~2 * Iem) 5: Output torque (0~3 * Tem) 6: Reserved 7: Motor rotating speed (0~Maximum output frequency) 8: Output voltage (0~1.5 * Ve) 9: Adjusted AI1（0~10V/4～20mA） 10: Adjusted AI2（0~10V/4～20mA） 11: Reserved 12: Output power (0~2*Pe) 13~15: Reserved 17: Percentage of host device (0~65535) 18~19: Reserved	0
P09.23	Maximum output pulse frequency	0.1~50.0	10.0
P09.24	Pulse output central point	0: Without central point 1: With central point	0
	selection	It is (P09.23)/2. It is positive when the frequency is less than the central point frequency 2: With central point It is (P09.23)/2. It is positive when the frequency is larger than the central point frequency	
P09.25	Pulse output filtering time	0.00～10.00s	0.05
Group P10: Analog input/output terminal parameters			
P10.00	Analog input properties	Unit place: AI1 0: Voltage input 1: Current input Tens place: AI2 0: Voltage input 1: Current input	00H
P10.01	Analog AI function selection	Unit place of LED: AI1 function selection 0: No function 1: Main reference frequency setting 2: Auxiliary reference frequency setting 3~7: Reserved 8: Torque command (reference) Tens place of LED: AI2 function selection is the same as AI1	00H
P10.02	AI1 zero offset	-100.0%~100.0%	0.0
P10.03	AI1 gain	0.00～10.00	1.00
P10.04	AI1 filtering	0.000～10.000s	0.010
P10.05	AI1 zero offset correction	0: Bias as a center 1:Lower than the bias is equal to the bias	0

Function code	Name	Setting range	Default value
	mode	2: Higher than the bias is equal to the bias 3: Bias as a center and get the absolute value	
P10.06	AI2 zero offset	-100.0%～100.0%	0.0
P10.07	AI2 gain	0.00～10.00	1.00
P10.08	AI2 filtering	0.000～10.000s	0.010
P10.09	AI2 zero offset correction mode	The same as P10.05	0
P10.10	Curve selection	Unit place of LED: AI1 curve selection 0: Curve 1 1: Curve 2 Tens place of LED: AI2 curve selection 0: Curve 1 1: Curve 2 Hundreds place of LED: Pulse input curve selection 0: Curve 1 1: Curve 2	000H
P10.11	Maximum reference of curve 1	P10.13~100.0%	100.0
P10.12	Actual value corresponds to the maximum reference of curve 1	Frequency reference: 0.0~100.0% of Fmax Process closed loop reference: synchronous speed of 0.0~100.0% maximum frequency (ie., the corresponding analog input of 0~10V)	100.0
P10.13	Minimum reference of curve 1	0.0%~P10.11	0.0
P10.14	Actual value corresponds to the minimum reference of curve 1	The same as P10.12	0.0
P10.15	Maximum reference of curve 2	P10.17~100.0%	100.0
P10.16	Actual value corresponds to the maximum reference of curve 2	The same as P10.12	100.0
P10.17	Minimum reference of curve 2	0.0%~P10.15	0. 0
P10.18	Actual value corresponds to the minimum reference of curve 2	The same as P10.12	0. 0
P10.19	Types of analog output	Unit place of LED: AO1 selection 0: 0~10V(0~20mA) 1: 2~10V(4~20mA)	00H

Function code	Name	Setting range	Default value
		Tens place of LED: AO2 selection 0: 0~10V(0~20mA) 1: 2~10V(4~20mA)	
P10.20	Analog output terminal AO1 functions	0: Output frequency (0~ maximum frequency) 1: Set frequency (0~ maximum frequency) 2: Set frequency (after acceleration/deceleration) (0~ maximum frequency) 3: Motor rotating speed (0~ maximum rotating speed) 4: Output current (0~2*Ie) 5: Output current (0~2*Iem) 6: Output torque (0~3 * Tem) 7: Reserved 8: Output voltage (0~1.2*Ve) 9: Bus voltage (0~800V) 10: AI1 after adjustment 11: AI2 after adjustment 12: Reserved 13: Output power (0~2*Pe) 14: Percentage of host device (0~4095) 15~23: Reserved 24: Motor rotating speed (bipolar, output frequency during V/F – slip compensation) 25~26: Reserved	0
P10.21	AO1 filtering	0.000～20.000s	0.010

Function code	Name	Setting range	Default value
P10.22	AO1 gain	0.0%～200.0%	100.0
P10.23	AO1 zero offset correction	-100.0%～100.0%	0.0
P10.24	Analog output terminal AO2 functions	The same as P10.20	0
P10.25	AO2 filtering	0.000～20.000s	0.010
P10.26	AO2 gain	0.0%～200.0%	100.0%
P10.27	AO2 zero offset correction	-100.0%～100.0%	0.0
Group P12: Advanced function parameters			
P12.00	Energy-saving running	0: Disabled 1: Enabled	0
P12.01	Carrier wave frequency	0.7～15.0kHz	8.0
P12.02	PWM mode optimization	Unit place: enable the over-modulation 0: Disabled 1: Enabled Tens place: automatic adjustment selection for carrier wave frequency 0: No automatic adjustment 1: Automatic adjustment Hundreds place: modulation mode 0: Two-phase/ three-phase switching 1: Three-phase modulation Thousands place: low frequency carrier limit	1001H

Function code	Name	Setting range	Default value
		0: Disable 1: Enable	
P12.03	Current loop proportional gain ACR-P	1~5000	600
P12.04	Current loop integral time ACR-I	0.5~100.0ms	8.0
P12.05	Anti-trip function enabling	0~1	0
P12.06	Frequency reduction rate upon voltage compensation	0.00~99.99Hz/s	10.00
P12.07	Pre-magnetizing time	0.0~10.0s	0.1
P12.08	Minimum flux reference value	10%~150%	10
P12.09	Flux-weakening adjustment coefficient 1	0~30000	1000
P12.10	Flux-weakening adjustment coefficient 2	0~30000	1000
P12.11	Flux-weakening control mode	0~1	1

Function code	Name	Setting range	Default value
P12.12 ~P12.14	Reserved		
Group P13: Multi-stage speed parameters			
P13.00	Multi-stage frequency 1	P02.14~P02.13	5.0
P13.01	Multi-stage frequency 2		10.0
P13.02	Multi-stage frequency 3		20.0
P13.03	Multi-stage frequency 4		30.0
P13.04	Multi-stage frequency 5		40.0
P13.05	Multi-stage frequency 6		45.0
P13.06	Multi-stage frequency 7		50.0
P13.07	Multi-stage frequency 8		5.0
P13.08	Multi-stage frequency 9		10.0
P13.09	Multi-stage frequency 10		20.0
P13.10	Multi-stage frequency 11		30.0
P13.11	Multi-stage frequency 12		40.0
P13.12	Multi-stage frequency 13		45.0

Function code	Name	Setting range	Default value
P13.13	Multi-stage frequency 14		50.0
P13.14	Multi-stage frequency 15		50.0
Group P14: Process PID parameters			
P14.00	Reference channel selection	0: Digital reference 1: AI1 analog reference 2: AI2 analog reference 3: Terminal PULSE reference 4: Serial port communication reference	0
P14.01	Feedback channel selection	0: AI1 analog reference 1: AI2 analog reference 2: AI1+AI2 3: AI1-AI2 4: MIN（AI1,AI2） 5: MAX（AI1,AI2） 6: Terminal PULSE reference	0
P14.02	Reference channel filtering	0.01~50.00s	0.50
P14.03	Feedback channel filtering	0.01~50.00s	0.50
P14.04	PID digital reference	-100.0%~100.0%	0.0
P14.05	Proportional gain KP	0.000~10.000	2.000
P14.06	Integral gain Ki	0.000~10.000	0.100

Function code	Name	Setting range	Default value
P14.07	Reserved		
P14.08	Sampling cycle	0.01~50.00s	0.50
P14.09	Output filtering time	0.01~10.00s	0.05
P14.10	Deviation limit	0.0~20.0%(Corresponds to PID reference)	2.0
P14.11	PID adjustment feature	0: Positive interaction 1: Reverse interaction Note: Adjust the relationship between the reference and the speed	0
P14.12	Integral adjustment selection	0: Frequency reaches the upper and lower limit, stop integral adjustment 1: Frequency reaches the upper and lower limit ,continue the integral regulator	0
P14.13	PID pre-set frequency	0~2000.0Hz	0.0
P14.14	Pre-set frequency retention time	0.0~3600.0s	0.0
P14.15	PID output reverse selection	0: PID output is negative, 0 frequency operation 1: PID output is negative, reverse Note: When PID output as auxiliary frequency always 1	0
P14.16	PID feedback loss action selection	0: PID lost no action 1: When the action continues to run at the current set frequency, no fault signal output, display alarm	0

Function code	Name	Setting range	Default value
		2: When the action coast to stop, a fault signal output	
P14.17	PID feedback lost detection value	0.0~100.0% The maximum output frequency is 100%.	0.0
P14.18	PID feedback lost detection time	0.0~25.0s	1.0
Group P15: Communication parameters			
P15.00	Protocol selection	0: MODBUS 1: Reserved	0
P15.01	Communication configuration	Unit place of LED: Baud rate selection 0: 4800bps 1: 9600 bps 2: 19200 bps 3: 38400 bps Tens place of LED: Data format 0: 1-8-2-N format, RTU 1: 1-8-1-E format, RTU 2: 1-8-1-O format, RTU 3: 1-7-2-N format, ASCII 4: 1-7-1-E format, ASCII 5: 1-7-1-O format, ASCII Hundreds place of LED: Wiring mode 0: Direct cabling (232/485) 1: MODEM (232)	001H
P15.02	Local address	0~247, 0 is the broadcast address	5
P15.03	Communication timeout	0.0~1000.0s	0.0
	detection time		
P15.04	Response delay of the drive	0~1000ms	5
Group P97: Protection and fault parameters			
P97.00	Protection action selection 1	Unit place of LED: Action upon communication fault 0: Activate protection and coast to stop 1: Alarm and keep running 2: Alarm and stop in the stop mode (only in serial port control mode) 3: Alarm and stop in the stop mode (in all control modes) Tens place of LED: Action upon contactor abnormality 0: Activate protection and coast to stop 1: Alarm and keep running Hundreds place of LED: Action upon EEPROM abnormality 0: Activate protection and coast to stop 1: Alarm and keep running Thousands place of LED: Action upon 24V/10V short circuit 0: Activate protection and coast to stop 1: Alarm and keep running	0000H
P97.01	Protection action selection 2	Unit place of LED: Action upon phase loss 0: Activate protection upon input and output phase loss	00H

Function code	Name	Setting range	Default value
		1: No protection upon input phase loss 2: No protection upon output phase loss 3: No protection upon input and output phase loss Tens place of LED: Action upon analog input (AI1, AI2) fault 1 : Activate protection and decelerate 2 : Activate protection and coast to stop 3 : Alarm and keep running	
P97.02	Fault indication selection 1	Unit place of LED: Action upon under-voltage fault indication 1 : No action 2: Action (under-voltage is regarded as a kind of fault) Tens place of LED: Action upon auto-reset interval fault indication 1 : No action 2 : Action Hundreds place of LED: Fault lockup function selection 1 : Prohibited 2 : Open (without fault output) 3 : Open (with fault output)	000H
P97.03	Overload protection setting for motor	Unit place of LED: Overload compensation mode 0: No action 1: Common motor (with low-speed compensation) 2: Variable-frequency motor (without low-speed compensation)	0001H

Function code	Name	Setting range	Default value
		Tens place of LED: Overload pre-alarm detection selection 0: Always detect 1: Detect only at constant speed Hundreds place of LED: Overload pre-alarm action selection 0: Alarm and keep running 1: Activate protection and coast to stop Thousands place of LED: Overload detection level selection 0: Relative to rated current of the motor (Er.OL2) 1: Relative to rated current of the drive (Er.oL1)	
P97.04	Overload pre-alarm detection level	20.0%～200.0%	130.0
P97.05	Overload pre-alarm detection time	0.0～60.0s	5.0
P97.06	Over-voltage stall selection	0: Disabled (when the braking resistor is installed) 1: Enabled	1
P97.07	Over-voltage point at stall	120.0%~150.0%Udce	140.0%
P97.08	Auto current limiting action selection	0: Disabled at constant speed 1: Enabled at constant speed Note: Always enabled for acceleration/deceleration	0

Function code	Name	Setting range	Default value
P97.09	Auto current limiting level	20.0%~200.0%Ie	150.0
P97.10	Frequency reduction rate upon current limiting	0.0~99.99Hz/s	10.00
P97.11~ P97.12	Reserved		
P97.13	The first fault type	0: No abnormal record 1: Over-current during the drive acceleration (Er.oC1) 2: Over-current during the drive deceleration (Er.oC2) 3: Over-current when the drive is running with constant speed (Er.oC3) 4: Over-voltage during the drive acceleration (Er.oU1) 5: Over-voltage during the drive deceleration (Er.oU2) 6: Over-voltage when the drive is running with constant speed (Er.oU3) 7: Reserved 8: Input side phase loss (Er.IrF) 9: Output side phase loss (Er.odF) 10: Power module protection (Er.drv) 11: Inverter bridge over-temperature (Er.oH1) 12: Reserved 13: Drive overload (Er.oL1) 14: Motor overload (Er.oL2)	0

Function code	Name	Setting range	Default value
		15: External fault（Er.EFT） 16: EEPROM read-write error (Er.EEP) 17: Abnormal serial port communication (Er.SC1) 18: Abnormal contactor (Er.rLy1) 19: Abnormal current detection circuit (Er.CUr) 20: Reserved 21: PID feedback lost (Er.FbL) 22: Reserved 23: Keyboard parameter copy error (Er.CoP) 24: Poor auto-tuning (Er.TUn) 25~27: Reserved 28: Parameter setting error (Er.PST) 29: Control board 24V power short circuit (Er.24v) 30~40: Reserved 41: Abnormal AI analog input fault (Er.AIF) 42: Inverter module temperature sampling disconnection protection (Er.THI) 43: Reserved 44: Short circuit of 10V power (Er.10v) Others: Reserved Note: 1.Er.drv fault can not be reset until 10s later; 2. For continuous over-current less than	

Function code	Name	Setting range	Default value
		3 times (including 3 times), it can not be reset until 6s later; if it is more than 3 times, it can not be reset until 200s later; 3. The keyboard displays AL.xxx in case of any fault (e.g. in case of the contactor fault, keyboard displays Er.xxx if there is protection action, and displays AL.xxx if continuing running with alarm)	
P97.14	The second fault type	The same as P97.13	0
P97.15	The third fault type	The same as P97.13	0
P97.16	DC bus voltage at the 3rd fault	0~999V	0V
P97.17	Actual current at the 3rd fault	0.0~999.9A	0.0
P97.18	Running frequency at the 3rd fault	0.0~2000.0Hz	0.0
P97.19	Drive running status at the 3rd fault	0~FFFFH	0000
Group P98: Drive parameters			
P98.00	Serial No.	0~FFFFH	Manufacturer setting
P98.01	MCU software version No.	0.00~99.99	Manufacturer setting
P98.02	User-customized version No.	0~9999	Manufacturer setting
P98.03	DSP software version No.	0.00~99.99	Manufacturer setting
P98.04	Rated capacity	Output power,0~999.9kVA(Depending on model)	Manufacturer setting
P98.05	Rated voltage	0~999V(Depending on model)	Manufacturer setting
P98.06	Rated current	0~999.9A(Depending on model)	Manufacturer setting
P98.07	Drive series selection	0:220V 1:380V	Manufacturer setting

Chapter 5 Troubleshooting

Displaying exception and solutions

All possible fault types for MV100 are summarized as shown in table 5-1. Before consulting the service department, the user can perform self-check according to the hints of the table and record the fault symptoms in detail. To seek for service support, please contact the sales person.

Table 5-1 Fault record table

Fault code	Fault type	Possible fault cause	Solutions
Er.oC1	Acceleration over-current of the drive	The acceleration time is too short.	Lengthen the acceleration time
		The motor parameters are incorrect.	Perform the parameter auto-tuning of the motor
		When instantaneous stop happens, restart the rotating motor	Set the start mode P08.00 as the speed tracking restart function
		The drive power is too low.	Adopt the drive with high power class
		V/F curve is improper.	Adjust the V/F curve setting and the manual torque increase
Er.oC2	Deceleration over-current of the drive	The deceleration time is too short.	Lengthen the deceleration time
		There is potential energy load or the load inertial torque is large.	Use additionally appropriate dynamic braking components
		The drive power is low.	Adopt the drive with high power class
Er.oC3	Constant speed over-current of the drive	The acceleration/deceleration time is too short.	Lengthen the acceleration/deceleration time appropriately
		Sudden load change or abnormal load	Check the load
		Low grid voltage	Check the input power supply
		The drive power is low	Adopt the drive with high power class
Er.oU1	Acceleration over-voltage of the drive	Abnormal input voltage	Check the input power supply
		Acceleration time is too short.	Lengthen the acceleration time appropriately
		When instantaneous stop happens, restart the rotating motor	Set the start mode P08.00 as the speed tracking restart function
Er.oU2	Deceleration over-voltage of the drive	The deceleration time is too short (compared with regeneration energy).	Lengthen the deceleration time
		There is potential energy load or the load inertial torque is large.	Select appropriate dynamic braking components
Er.oU3	Constant speed over-voltage of the drive	When the vector control functions, the ASR parameter setting is improper.	See the ASR parameter setting of Group P05

Fault code	Fault type	Possible fault cause	Solutions
		The acceleration/deceleration time is too short.	Lengthen the acceleration/deceleration time appropriately
		Abnormal input voltage	Check the input power supply
		The input voltage fluctuates abnormally	Install the input reactor
		Large load inertia	Adopt dynamic braking components
Er.IrF	Input side phase loss	There is phase loss in input R.S.T.	Check the installation wiring Check the input voltage
Er.odF	Output side phase loss	There is phase loss in output U.V.W.	Check the output wiring Check the motor and the cables
Er.drv	Power module protection	There is interphase short circuit or grounding short circuit in output three phases.	Rewiring and check if the motor insulation is good.
		Instantaneous over-current of the drive	See the over-current solutions
		The duct is blocked or the fan is damaged.	Unblock the duct or replace the fan
		The ambient temperature is too high.	Lower the ambient temperature
		The wirings or the plug-in units of the control board loosens.	Check them and rewiring
		Abnormal current waveform caused by output phase loss and so on	Check the wiring
		The auxiliary power supply is damaged; the drive voltage is insufficient.	Seek for service support
		Inverter module bridging conduction	Seek for service support
		Abnormal control board	Seek for service support
		Braking pipe damaged	Seek for service support
Er.oH1	Inverter module heatsink over-temperature	The ambient temperature is too high.	Lower the ambient temperature
		The duct is blocked.	Clean the duct

Fault code	Fault type	Possible fault cause	Solutions
		The fan is damaged.	Replace the fan
		The inverter module is abnormal.	Seek for service support
Er.oL1	Drive overload	The motor parameters are incorrect.	Perform the parameter auto-tuning of the motor
		The load is too large.	Adopt the drive with higher power
		The DC braking amount is too large.	Reduce the DC braking current and lengthen the braking time
		When instantaneous stop happens, restart the rotating motor	Set the start mode P08.00 as the speed tracking restart function
		The acceleration time is too short.	Lengthen the acceleration time
		The grid voltage is too low.	Check the grid voltage
		V/F curve is improper.	Adjust V/F curve and torque increase
Er.oL2	Motor overload	The motor overload protection factor setting is incorrect.	Set the overload protection factor of motor correctly.
		The motor is blocked or the sudden change of load is too large.	Check the load
		The universal motor runs at low speed for a long time, with heavy load.	If long-term low-speed running is required, special motor should be used.
		The grid voltage is too low.	Check the grid voltage
		V/F curve is improper.	Set V/F curve and torque increase correctly
Er.EFT	Emergency stop or external device fault	Stop suddenly by pressing the STOP key	See the function definition of the STOP key in P00.04
		External fault emergency-stop terminal is enabled.	After the external fault is revoked, release the external fault terminal
Er.EEP	EEPROM read/write fault	The read/write error of the control parameters occurs.	Reset by pressing the STOP/RESET key, seek for service support
Er.SC1	Abnormal remote serial port communication	The baud rate is set improperly.	Set the baud rate properly.
		Serial port communication error	Reset by pressing the STOP/RESET key, seek for service support
		The fault alarm parameters are set	Modify the P15.03 and P97.00 settings

Fault code	Fault type	Possible fault cause	Solutions
		improperly.	
		The host device does not work.	Check if the host device is working and if the wiring is correct.
Er.rLy	Abnormal contactor	The grid voltage is too low.	Check the grid voltage
		The contactor is damaged.	Replace the contactor of the main circuit, seek for service support
		The power-up buffer resistance is damaged.	Replace the buffer resistance, seek for service support
		The control circuit is damaged.	Seek for service support
		Input phase loss	Check the input R.S.T. wiring
Er.CUr	Current detection circuit abnormal	Current detection device damage	Seek for service support
		The amplifying circuit is abnormal.	Seek for service support
Er.FbL	Closed loop feedback loss	The parameters for feedback loss are set improperly.	Modify the P14.17 setting
		Feedback wire-break	Rewiring
		The reference of closed loop feedback value is too low.	See the P14.01 setting and increase the feedback reference
Er.CoP	Operation panel parameter copying error	The operation panel parameters are incomplete or the operation panel version is inconsistent with main control panel version.	Refresh the operation panel data and version, use P00.03=1 for uploading the parameters first and then use P00.03=2 or 3 for downloading.
		The operation panel EEPROM is damaged.	Seek for service support
Er.TUn	Poor auto-tuning	The nameplate parameters of the motor are incorrect.	Set the parameters properly according to the motor nameplate
		When reverse running is prohibited, reverse rotating auto-tuning is performed.	Cancel the reverse running prohibition
		Auto-tuning overtime	Check motor wiring
			Check the P02.13 (upper limit frequency) and see whether the P03.03 set value is lower than rated frequency.

Fault code	Fault type	Possible fault cause	Solutions
Er.PST	Parameter setting error	Wrong analog AI function selection setting	The same function shall not be selected for different analogs simultaneously.
Er.24v	Control board 24V power short circuit	Short circuit of P24 and terminal COM	Confirm whether the wiring of P24 and COM is correct
Er.AIF	Abnormal AI analog input	Abnormal control circuit	Seek for service support
		The input analog is out of the range and the absolute value is greater than 11V	Check the analog input
Er.THI	Inverter module temperature sampling disconnection	Abnormal temperature sampling circuit	Seek for service support
		The inverter module temperature sampling wire is poorly connected.	Check the inverter module temperature sampling wire connection
Er.10v	Control board ±10V power short circuit	±10V grounding	Confirm whether the ±10V wiring is correct
		The interface board circuit is damaged.	Replace the interface board, seek for service support

Note:

1. Er.drv fault can not be reset until 10s later;
2.For continuous over-current less than 3 times (including 3 times), it can not be reset until 6s later; if it is more than 3 times, it can not be reset until 200s later;
3.The keyboard displays AL.xxx in case of any fault (e.g. in case of the contactor fault, keyboard displays Er.xxx if there is protection action, and displays AL.xxx if continuing running with alarm).