MV200 Series High Performance General Drive

User Manual

Document Version: V1.0
Archive Date: 2015/07/29
BOM Code: R33010201

Shenzhen Kaidechang Electronic Technology Co., Ltd.

Address: Room 309, Wutong Space, No. 2123, Bixin Road,
Longgang District, Shenzhen, China

Email: 3176708292@ qq.com
13265873957@163.com

Tel: +86-13265873957
+86-18123659512

http://www.huoerxin.com

Foreword

Thank you for choosing the MV200 series high performance general drive of Shenzhen Megmeet Drive Technology Co., Ltd.

MV200 adopt unique control method to achieve the high performance, high torque, wide range speed regulation. It has perfect anti-tripping control design, strong usability, good site adaptability to ensure continuous and reliable operation in poor grid, dust and other complex environment. For the general customer demand, MV200 provide practical process close-loop control, multi-functional input/output terminals, pulse frequency reference, simple PLC and main/auxiliary reference control, satisfy the industry and customized requirements, which is of great value for reducing the system cost and improving the system reliability.

MV200 can meet the requirements of the users for low noise and low EMI by adopting the integrated EMC design and optimized PWM control technology.

The relevant precautions during the installation, wiring, parameter setting, troubleshooting and daily maintenance will be detailed in this manual. To ensure the correct installation and operation of the MV200 series drive as well as its high performance, please read carefully this user manual before installing the equipment. This manual shall be kept properly and delivered to the actual users of the drive.

Precautions for unpacking inspection

Please check carefully when unpacking the product:

- Whether the product has the damage signs;
- Whether the rated value in the nameplate is consistent with your order requirement.

We have implemented strict inspection on the manufacturing, package and delivery of the product. If there is any error, please contact us or your distributor immediately.

We are engaged in the continuous improvement of drive. The relevant manuals provided by us are subject to change without prior notice.

Safety Precautions



Operation without following instructions can cause death or severe personal injury.



Operation without following instructions can cause medium or slight personal injury or damage to the product and other equipment.



- Please install the product on the incombustible materials (e.g., metal), otherwise, fire may be caused.
- Do not place any combustible material near the product, otherwise, fire may be caused.
- Do not install the product in the environment with explosive gas, otherwise, explosion may be caused.

- Only qualified personnel can wire the drive, otherwise, electric shock may be caused.
- Never wire the drive unless the input AC supply is completely disconnected, otherwise, electric shock may be caused.
- The grounding terminal of the drive must be reliably grounded, otherwise, electric shock may be caused.
- The cover must be properly closed before power up, otherwise, electric shock and explosion may be caused.
- When powering up the drive that has been stored for over 2 years, the input voltage must be gradually increased with the voltage regulator, otherwise, electric shock and explosion may be caused.
- Do not touch the terminals when the product is powered up, otherwise, electric shock may be caused.
- Do not operate the drive with wet hands, otherwise, electric shock may be caused.
- Maintaince operation can not be conducted until 10 minutes has passed after disconnecting the power supply. Meanwhile, be sure to confirm that the chage LED is completely off and the DC bus voltage is below 36V, otherwise, electric shock may be caused.
- Only qualified personnel can replace the components. Do not leave any wire or metal parts inside the drive, otherwise, fire may be caused.
- After changing the control board, the parameters must be properly set before operating the drive, otherwise, property damage may be caused.
- The bare parts of the terminal lugs in the main circuit must be wrapped with insulation tape, otherwise, electric shock may be caused.



WARNING

- When carrying the drive, protect the operation panel and the cover against any stress, otherwise, the drive may drop and cause human injury or property damage.
- Please install the drive on the place that can withstand the weight of the drive, otherwise, the drive may drop and cause human injury or property damage.
- Do not install the drive in the environment with water splash (e.g., near the water pipe), otherwise, you may suffer the property loss.
- Take care not to drop any foreign objects, such as the screws, gaskets and metal bars, into the drive, otherwise, fire and property damage may be caused.
- Do not install and operate the drive if it is damaged or its components are not complete, otherwise, fire and human injury may be caused.
- Do not install the product in the place exposed to direct sunlight, otherwise, property damage may be caused.
- Do not short circuit terminal P/B1 and terminal -DC, otherwise, fire and property damage may be caused.
- Cable lugs must be firmly connected to the terminals of main circuit, otherwise, property damage may be caused.
- Do not connect AC 220V input to the control terminals other than terminal TA, TB, TC, otherwise, property damage may be caused.

Contents

Chapter 1 Introduction of MV200 Series Drive 6

1. Product model 6
2. Product nameplate 6
3. Product series 7
4. Technical specifications of product 8
5. Drive structure 9
6. Outline, mounting dimensions and gross weight of drive 10
7. Outline and mounting dimensions of operation panel 14
8. Outline and mounting dimensions of operation panel box 14
9. Options 15

Chapter 2 Drive Installation 17

1. Removal and installation of drive components 17
2. Installation environment 18
3. Mounting direction and space 18

Chapter 3 Wiring of Drive 20

1. Wiring and configuration of main circuit terminals 21
2. Wiring and configuration of control circuit 29
3. Installation method for EMC requirements 40

Chapter 4 Quick Operation Guide for Drive 51

1. Drive operation panel 51
2. Drive running mode 60
3. Initial power-up 62

Chapter 5 Parameter List 64

1. Basic menu function code parameter table 64

Chapter 6 Parameter Description 104

1. System management parameters (Group P00) 104
2. Status display parameters (Group P01) 108
3. Basic parameters (Group P02) 111
4. Motor parameters (Group P03) 119
5. VF control parameters (Group P07) 124
6. Start and stop control parameters (Group P08) 127
7. Digital input/output parameters (Group P09) 130
8. Analog input/output terminal parameters (Group P10) 148
9. Auxiliary function parameters (Group P11) 156
10. Advanced function parameters (Group P12) 161
11. Multi-stage reference and simple PLC parameters (Group P13) 164
12. Process PID parameters (Group P14) 171

13. Communication parameters (Group P15)....176
14. Keyboard display setting parameters (Group P16)....178
15. Fieldbus option parameters (Group P40)....180
16. Protection and fault parameters (Group P97)....181
17. Drive parameters (Group P98)....187
Chapter 7 Troubleshooting....189
1. Displaying exception and solutions....189
2. Operation exception and solutions....196
Chapter 8 Maintenance....199
1. Daily maintenance....199
2. Periodical maintenance....200
3. Replacing wearing parts....200
4. Storage of drive....201
Appendix 1 Modbus Communication Protocol....202
1. Networking mode....202
2. Interface mode....202
3. Communication mode....202
4. Protocol format....202
5. Protocol functions....204
6. Control parameters and status parameters of drive....211
7. Expand access mode....218
8. Cautions....223
9. CRC verification....225
10. Application example....227
11. Scaling of drive parameters....229
Appendix 2 Braking Components....230
Appendix 3 Warranty and Service....232
Parameter record table....234
Wring diagram....235

Chapter 1 Introduction of MV200 Series Drive

1.1 Product model

The description of the drive model on the nameplate indicates the information of the product, such as product series, voltage class of power supply, power class, the software/hardware code of customized product, etc.

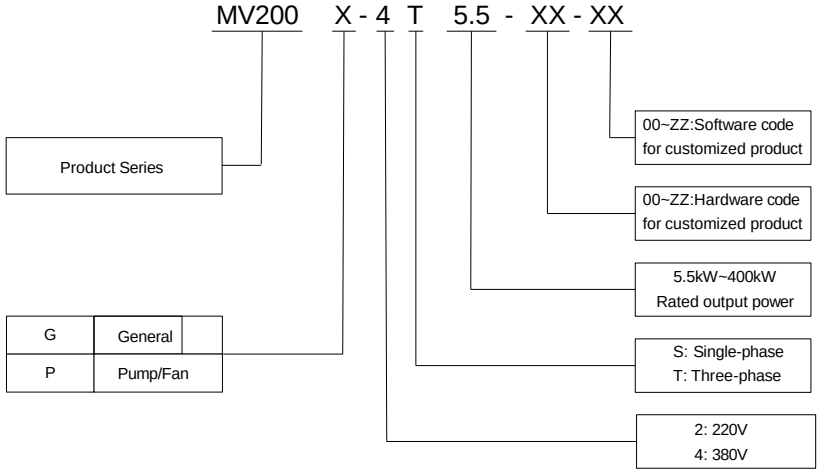

1.2 Product nameplate

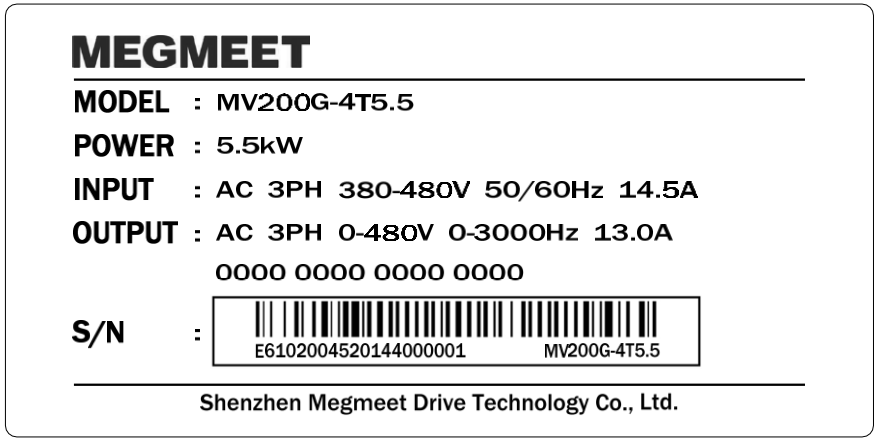

1.3 Product series

Table 1-1 Name and model of MV200G

Enclosure mode	Product model	Rated capacity (kVA)	Rated input current (A)	Rated output current (A)	Rated output power (kW)
R3	MV200G-4T5.5	8.5	14.5	13.0	5.5
	MV200G-4T7.5	11.0	20.5	17.0	7.5
R4	MV200G-4T11	17.0	26.0	25.0	11
	MV200G-4T15	21.0	35.0	32.0	15
	MV200G-4T18.5	24.0	38.5	37.0	18.5
R5	MV200G-4T22	30.0	46.5	45.0	22
	MV200G-4T30	40.0	62.0	60.0	30
	MV200G-4T37	50.0	76.0	75.0	37
R6	MV200G-4T45	60.0	92.0	90.0	45
	MV200G-4T55	72.0	113.0	110.0	55
R7	MV200G-4T75	100.0	157.0	152.0	75
R8	MV200G-4T90	116.0	180.0	176.0	90
	MV200G-4T110	138.0	214.0	210.0	110
	MV200G-4T132	167.0	256.0	253.0	132
R9	MV200G-4T160	200.0	307.0	304.0	160
	MV200G-4T200	250.0	385.0	380.0	200
R10	MV200G-4T220	280.0	430.0	426.0	220
	MV200G-4T280	355.0	525.0	495.0	280
	MV200G-4T315	445.0	590.0	585.0	315
R11	MV200G-4T355	500.0	665.0	650.0	355
	MV200G-4T400	565.0	785.0	725.0	400

Table 1-2 Name and model of MV200P

Enclosure mode	Product model	Rated capacity (kVA)	Rated input current (A)	Rated output current (A)	Rated output power (kW)
R2	MV200P-4T5.5	8.5	14.5	13.0	5.5
R3	MV200P-4T7.5	11.0	20.5	17.0	7.5
R4	MV200P-4T11	17.0	26.0	25.0	11
	MV200P-4T15	21.0	35.0	32.0	15
	MV200P-4T18.5	24.0	38.5	37.0	18.5
R5	MV200P-4T22	30.0	46.5	45.0	22
	MV200P-4T30	40.0	62.0	60.0	30
	MV200P-4T37	50.0	76.0	75.0	37
R6	MV200P-4T45	60.0	92.0	90.0	45

	MV200P-4T55	72.0	113.0	110.0	55
R7	MV200P-4T75	100.0	157.0	152.0	75
	MV200P-4T90	116.0	180.0	176.0	90
R8	MV200P-4T110	138.0	214.0	210.0	110
	MV200P-4T132	167.0	256.0	253.0	132
R9	MV200P-4T160	200.0	307.0	304.0	160
	MV200P-4T200	250.0	385.0	380.0	200
	MV200P-4T220	280.0	430.0	426.0	220
R10	MV200P-4T280	355.0	525.0	495.0	280
	MV200P-4T315	445.0	590.0	585.0	315
R11	MV200P-4T355	500.0	665.0	650.0	355
	MV200P-4T400	565.0	785.0	725.0	400

1.4 Technical specifications of product

Table 1-3 Technical specifications of drive

Input power	Rated voltage (V)	Three-phase: 380V~480V; continuous fluctuation of voltage: ±10%, transient fluctuation of voltage: -15%~+10%; Voltage unbalance rate: ＜3%, the distortion rate complies with IEC61800-2
	Rated input current (A)	Please refer to Table 1-1 and Table 1-2
	Rated frequency (Hz)	50Hz/60Hz, fluctuation range: ±5%
Output power	Standard applicative motor (kW)	Please refer to Table 1-1 and Table 1-2
	Rated capacity (kVA)	
	Rated current (A)	
	Output voltage (V)	Output with three-phase under rated input conditions: 0 ~ rated input voltage, the error is less than ±3%
	Output frequency (Hz)	0.00~3000.0Hz,the minimum unit: 0.01Hz
	Overload capacity	G: 1 min for 150% rated current, 0.5 s for 200% rated current P: 1 min for 110% rated current, 1 s for 150% rated current
Operation control features	Control mode	High-performance vector control
	Maximum output frequency	3000Hz
	Speed adjusting range	1: 100
	Speed control precision	±0.5%
	Speed fluctuation	±0.3%
	Startup torque	150% @ 0.5Hz
Product functions	Key functions	Fast tracking, multi-stage speed operation, multiple acceleration/deceleration time switching, auto-tuning, S curve acceleration/deceleration, slip compensation, fan control, skip frequency operation, energy saving operation, PID adjustment (sleep function), non-stop upon instantaneous power interruption, switching of multi-command, MODBUS communication, Fieldbus communication, drooping control, automatic restart, DC braking, dynamic braking; simple PLC, dwell

		function, two sets of motor parameters switching
	Basic frequency	0.01Hz~3000.0Hz
	Startup frequency	0.00Hz~60.00Hz
	Frequency setting mode	Digital panel setting, terminal UP/DN setting, host device communication setting, analog setting (AI1/AI2), terminal pulse setting, fieldbus communication setting
	Acceleration/deceleration time	0.1~3600.0 (unit can be selected among 0.1s, s and min)
	Dynamic braking capacity	G:18.5kW and below have built-in braking unit as standard, 22kW~75kW can customize built-in braking unit,braking rate: 0.0~100.0% P:18.5kW and below have built-in braking unit as standard, 22kW~90kW can customize built-in braking unit,braking rate: 0.0~100.0%
	DC braking capacity	Initial frequency: 0.00Hz~60.00Hz Braking time: 0.1s~30.0s Braking current: 0%~100% for model G, 0%~50% for model P; according to the nominal rated current of the drive
	Terminal functions	Please refer to the introduction of terminal functions for details
Protection function	Refer to “Protection function” section for details.	
Others	Efficiency	≥93% (7.5kW and below); ≥95% (45kW and below); ≥98% (55kW and above)
	Installation method	Wall-mounted
	Protection degree	IP20
	Cooling mode	Air cooling with fan control
Environment	Operating site	Indoor, away from direct sunlight, free from corrosive gas, combustible gas, oil mist, water vapor, water dripping or salt
	Altitude	Used at the place lower than 1000m, (derated at the place above 1000m, derated 1% for every increase of 100m)
	Ambient temperature	-10℃~+40℃ (derated when used in the ambient temperature of 40℃~50℃)
	Humidity	5%~95%RH, non-condensing
	Vibration	Less than 5.9m/s^2(0.6g)
	Storage temperature	-40℃~+70℃

1.5 Drive structure

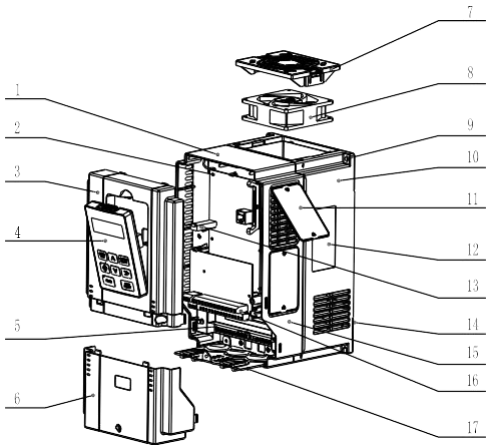

1. Mid-enclosure 2. Main control board 3. Upper cover 4. Operation panel 5. Main circuit wiring terminal 6. Lower cover 7. Fan guard 8. Fan 9. Mounting holes for complete unit 10. Bottom enclosure 11. Dustproof plate 12. Nameplate 13. Connector 14. Bottom plate 15. Mid-enclosure 16. Control terminal 17. Wiring plate

Fig. 1-1 Drive structure (taking R4 as an example)

1.6 Outline, mounting dimensions and gross weight of drive

There are four types of outlines as shown in Fig. 1-2, Fig. 1-3, Fig. 1-4 and Fig. 1-5. The outline, mounting dimensions and gross weight are as shown in Table 1-4 and Table 1-5.

1. Enclosure R2~R4 (G: 5.5kW-18.5kW; P:5.5kW-18.5kW)

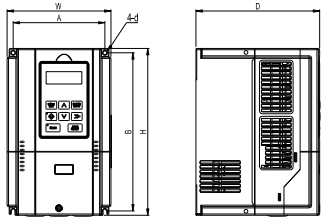

Fig. 1-2 Outline, mounting dimensions for products of R2~R4

2. Enclosure R5~R8 (G: 22kW-132kW; P: 22kW-132kW)

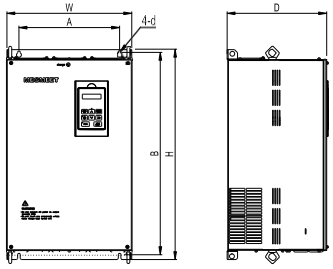

Fig. 1-3 Outline, mounting dimensions for products of R5~R8

3. Enclosure R9~R10 (G: 160kW-315kW; P: 160kW-315kW)

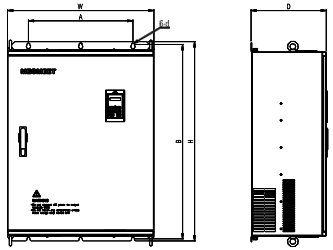

Fig. 1-4 Outline, mounting dimensions for products of R9~R10

4. Enclosure R11 (G: 355kW-400kW; P: 355kW-400kW)

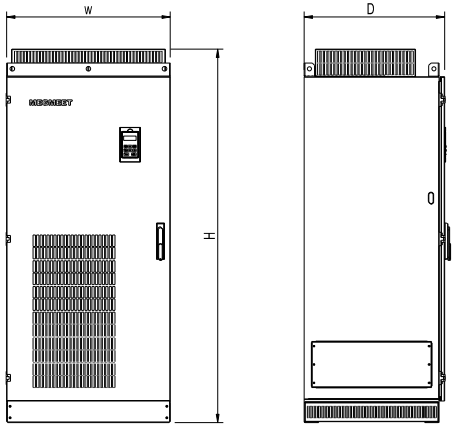

Fig. 1-5 Outline, mounting dimensions for products of R11

Table 1-4 Outline, mounting dimensions and gross weight of MV200G

Enclosure model	Drive model	A（mm）	B（mm）	H（mm）	W（mm）	D（mm）	Diameter of mounting aperture (mm)	Gross weight ±0.5 (kg)
R3	MV200G-4T5.5	137	236	249	155	198	5.5	4
	MV200G-4T7.5							
R4	MV200G-4T11	186	314.5	330	209	206	6.5	9
	MV200G-4T15							
	MV200G-4T18.5							
R5	MV200G-4T22	220	437.5	451.5	284.5	213	6.5	19
	MV200G-4T30							
	MV200G-4T37							
R6	MV200G-4T45	270	549	570	335	267	7	41
	MV200G-4T55							
R7	MV200G-4T75	270	579	600	335	292	7	49

R8	MV200G-4T90	350	705	726.5	452	328.5	12	87
	MV200G-4T110							
	MV200G-4T132							
R9	MV200G-4T160	350	827.5	849.5	500	350	12	154
	MV200G-4T200							
R10	MV200G-4T220	500	932	956	700	361.5	14	216
	MV200G-4T280							
	MV200G-4T315							
R11	MV200G-4T355	—	—	1624	710	610	—	250
	MV200G-4T400							

Table 1-5 Outline, mounting dimensions and gross weight of MV200P

Enclosure model	Drive model	A（mm）	B（mm）	H（mm）	W（mm）	D（mm）	Diameter of mounting aperture (mm)	Gross Weight ±0.5 (kg)
R2	MV200P-4T5.5	115	218	229	126	174	5.5	4
R3	MV200P-4T7.5	137	236	249	155	198	5.5	4
R4	MV200P-4T11	186	314.5	330	209	206	6.5	9
	MV200P-4T15							
	MV200P-4T18.5							
R5	MV200P-4T22	220	437.5	451.5	284.5	213	6.5	19
	MV200P-4T30							
	MV200P-4T37							
R6	MV200P-4T45	270	549	570	335	267	7	41
	MV200P-4T55							
R7	MV200P-4T75	270	579	600	335	292	7	49
	MV200P-4T90							
R8	MV200P-4T110	350	705	726.5	452	328.5	12	87
	MV200P-4T132							
R9	MV200P-4T160	350	827.5	849.5	500	350	12	154
	MV200P-4T200							
	MV200P-4T220							
R10	MV200P-4T280	500	932	956	700	361.5	14	216
	MV200P-4T315							
R11	MV200P-4T355	—	—	1624	710	609	—	250
	MV200P-4T400							

Note: For the drive of 75kWG~280 kWG /90 kWP~315kWP, DC reactor is included in its optional configuration. The weight of DC reactor is not included in the gross weight of the Table 1-4 and Table 1-5. For the drive of 355kWG /355kWP and above, DC reactor is included in its standard configuration. Outline and dimensions of DC reactor are shown below.

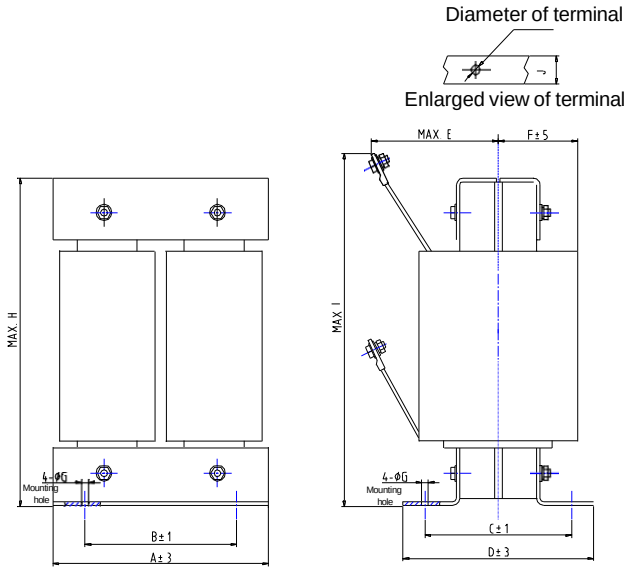

Fig. 1-6 Dimensions of DC reactor

Table 1-6 Mechanical parameters of DC reactor

Applicable drive（kW）	Model of DC reactor	Recommended size of copper（mm²）	Size（mm）											Gross weight（kg）
			A	B	C	D	E	F	G	H	I	J	Diameter of terminal	
75G	DCL-0160-UIDH-EM36	60	160	100	98	130	95	65	9	215	/	20	φ8	14.5
90G/90P	DCL-0180-UIDH-EM33												φ10	16
110G/110P	BC-C00051B	100	210	176	115	150	125	84	11	255		30	φ12	25.5
132G/132P	JSY-3674	150	200	170	135	171	120	85	10	260	280	30	φ12	28
160G/160P	JSY-3449		210	180			130		12	280	320			32
200G/200P	JSY-3066-1	200	220	190	135	171	150	90	12	315	340	40	φ15	40
220G/220P		250												
280G/280P	JSY-3067-1	325			145	181	160	95						45
315G/315P														

Note

1. Columns B and C in Table 1-6 are the sizes of mounting holes of DC reactor.

2.For the drive of 75kWG~132kWG/132kWP, the DC reactor is packed separately with a wooden box, so the gross weight includes the weight of the DC reactor and the wooden box.

3.DC reactor should be installed at the bottom of the cabinet if it is to be installed inside a cabinet. The clearance between reactor and the drive should be at least 35cm, and the reactor should be as far away from

the air inlet port of the drive as possible. If ventilation is poor in the cabinet, it is recommended to increase fan forced air cooling for the reactor to avoid high ambient temperature.

1.7 Outline and mounting dimensions of operation panel

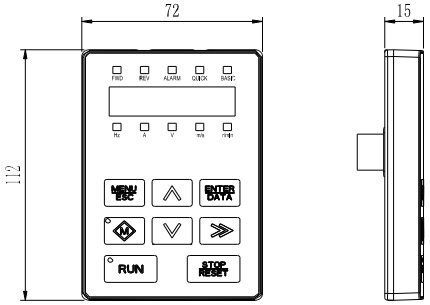

Fig. 1-7 Outline and mounting dimensions of operation panel

1.8 Outline and mounting dimensions of operation panel box

The outline dimensions of the box used for mounting operation panel is as shown in Fig. 1-8.

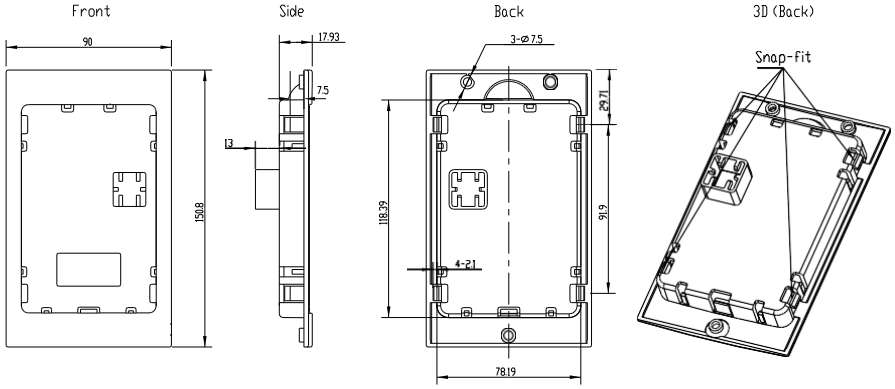

Fig. 1-8 Outline dimensions of operation panel box

The mounting dimensions of the operation panel box is as shown in Fig. 1-9.

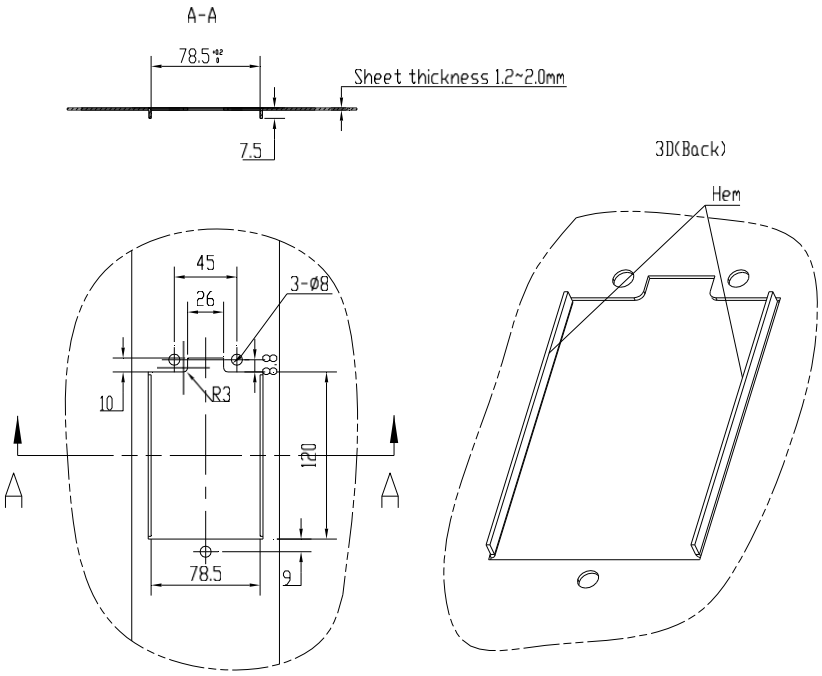

Fig. 1-9 Mounting dimensions of operation panel box

9. Options

1. LCD operation panel (reserved)

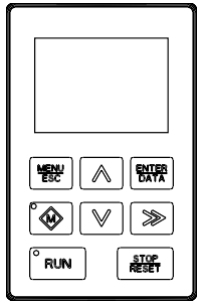

Fig. 1-10 LCD operation panel

1.9.2 Braking components

The information of braking components is as shown in Table 1-7.

Table 1-7 Braking components of MV200

Model		Braking components
G	18.5kW and below	Built-in braking unit.
	22kW~75kW	Built-in braking unit, need customization.
	90kW and above	Separate braking unit, see Appendix 2.
P	18.5kW and below	Built-in braking unit.
	22kW~90kW	Built-in braking unit, need customization.
	110kW and above	Separate braking unit, see Appendix 2.

Chapter 2 Drive Installation

2.1 Removal and installation of drive components

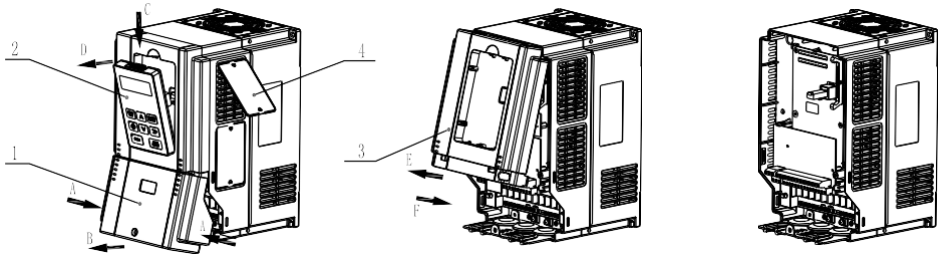

1. Lower cover 2. Operation panel 3. Upper cover 4. Dustproof plate

Fig. 2-1 Removal and installation of drive components (taking R4 as an example)

1. Removal and installation of lower cover

Removal: Loosen the fixing bolts of the lower cover with the screwdriver, press the snap-fits on both sides in direction A, make snap-fits off with the mid-enclosure and then lift the lower cover in direction B. Now, the lower cover is removed.

Installation: Insert the insertion piece at the top of the lower cover into the upper cover, press both sides of the lower cover with both hands in direction A so that the snap-fits can enter into the mid-enclosure, then tighten the fixing bolts of the lower cover with the screwdriver. Now, the lower cover is installed.

2. Removal and installation of operation panel

Removal: Insert your finger into the square hole above the operation panel, press the clip in direction C and then separate the upper section of the operation panel with the upper cover in direction D, then separate the connector with the operation panel. Now, the operation panel is removed.

Installation: Ensure the display of the operation panel face upwards, press the operation panel into its box while keeping them parallel. Now, the operation panel is installed.

3. Removal and installation of upper cover

Removal: Loosen the fixing bolts of the upper cover with the screwdriver, pull in direction E to separate the upper cover from the mid-enclosure (if necessary, press the snap-fits of the upper cover from its side with the straight screwdriver). Now, the upper cover is removed.

Note: Do not directly remove the upper cover with the operation panel on it. The operation panel should be removed before removing the upper cover to avoid damages to the connecting base between the operation panel and control board, which may cause unreliable contact between the operation panel and the control board.

Installation: Press the lower part of the upper cover in direction F so that its snap-fits can enter into the mid-enclosure, and then tighten the fixing bolts of the upper cover with the screwdriver. Now, the upper cover is installed.

4. Removal and installation of dustproof plate

Removal: It is recommended to push both snap-fits of the dustproof plate from the inside of the enclosure with tools, so that the snap-fits can be separated from the mid-enclosure. Now, the dustproof plate is removed.

Note: Removing the dustproof plate from the outside of the enclosure directly may damage it or the mid-enclosure.

Installation: Place the snap-fit on one end of the dustproof plate into the mid-enclosure, move the dustproof plate to another end while pressing it till the snap-fit on another end also enters into the mid-enclosure. Now, the dustproof plate is installed.

Note: Do not press the dustproof plate forcibly if it is deformed, otherwise, it may be damaged.

2. Installation environment

When selecting the installation environment, the following issues should be taken into account:

- The ambient temperature should be within -10℃~40℃. If the temperature is between 40℃~50℃, derating is required.
- The humidity should be within 5%~95% RH, non-condensing.
- The vibration at the installation place should be less than 5.9m/s^2(0.6g).
- The device should be protected from the direct sunlight.
- The device should be mounted in the location free of dust and metal powder.
- Do not install the device in the place with corrosive gas and explosive gas.

If there is any special installation requirement, please consult our company.

3. Mounting direction and space

In general, the drive shall be installed vertically to avoid poor heat dissipation.

For the installation spacing and distance requirement, please refer to Fig.2-2 and Fig.2-3.

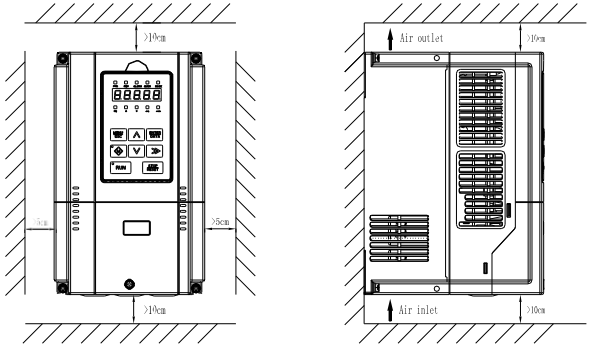

Fig. 2-2 Installation spacing for models of 55kWG/55kWP and below

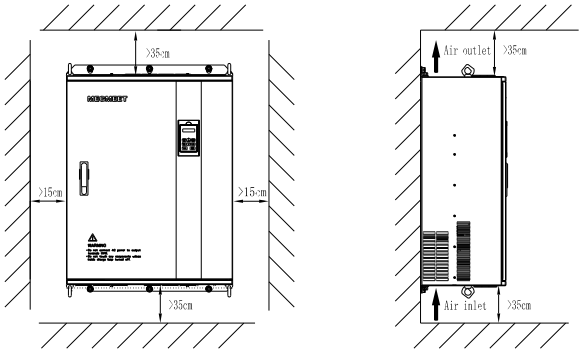

Fig. 2-3 Installation spacing for models of 75kWG/75kWP and above

When more than two drives are mounted in the up-down installation mode, the partition plate should be installed between them, so as to avoid the influence of the heat dissipation from the bottom drive on the top one, as shown in Fig.2-4.

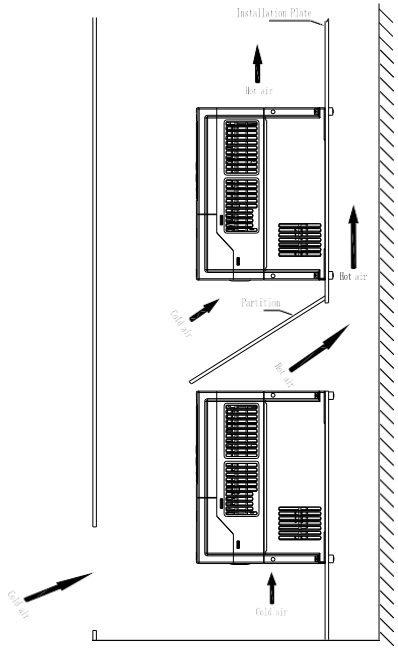

Fig. 2-4 Installation of multiple drives

Chapter 3 Wiring of Drive

This chapter introduces the wiring and cable connection of drive, as well as the issues needing attention.

DANGER

- Do not open the cover until the power supply of the drive is completely disconnected for at least 10 minutes.
- Make sure that the internal wiring be conducted only when the charge LED inside the drive is off and the voltage between the main circuit terminals +DC and -DC is below 36V.
- Only the well-trained and authorized personals are allowed to perform the internal wiring of the drive.
- Check the wiring carefully when connecting the emergency stop or safety circuit.
- Check the voltage level of the drive before power-on, otherwise, human injury and death or equipment damage may be caused.

WARNING

- Check carefully whether the rated input voltage of the drive is consistent with the AC power voltage before power-on.
- The drive has passed the dielectric strength test before delivery. Do not conduct this test again.
- When connecting the external braking resistor or braking unit, please refer to Chapter 1.
- Do not connect the AC supply cables to the output terminals U, V and W.
- The diameter of copper cable used as grounding wire should be bigger than 3.5mm and the grounding resistance should be less than 10Ω.
- There is leakage current inside the drive and the value of the leakage current depends on the operating conditions. To ensure the safety, the drive and the motor must be grounded and a Residual Current Detector (i.e. RCD) is required. The type B RCD is recommended. The set value of the leakage current is 300mA.
- To provide the over-current protection for the input side and facilitate the power-off maintenance, the drive should be connected to the AC supply through a circuit breaker or a fuse.

Please refer the wiring diagram shown in Fig. 3-1 when commissioning.

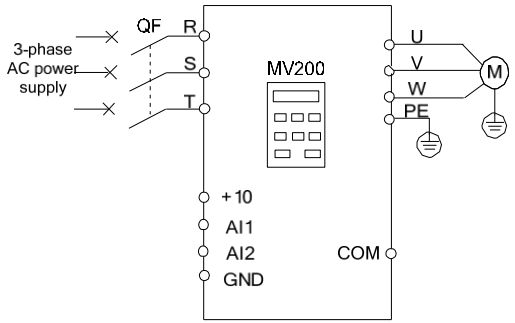

Fig. 3-1 Simple wiring diagram for main circuit

1. Wiring and configuration of main circuit terminals

1. Types of main circuit input/output terminals

There are seven types of main circuit terminals, due to different drive models. The detailed descriptions are as follows:

Terminal type 1

Applicable models: MV200G-4T5.5 ~ MV200G-4T18.5, MV200P-4T5.5 ~ MV200P-4T18.5

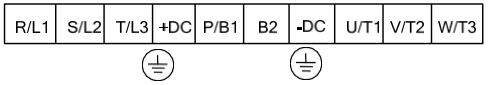

Terminal	Function
R/L1, S/L2, T/L3	Three-phase AC 380V input terminals
+DC, P/ B 1	Reserved for external DC reactor, connected with copper bus upon delivery
P/ B 1, B2	Reserved for external braking resistor(please refer to Table 1-7)
-DC	DC negative bus output terminals
U/T1, V/T2, W/T3	Three-phase AC output terminals

Terminal type 2

Applicable models:MV200G-4T22~ MV200G-4T30, MV200P-4T22 ~ MV200P-4T37

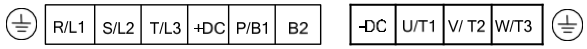

Terminal	Function
R/L1, S/L2, T/L3	Three-phase AC 380V input terminals
+DC, P/ B 1	Reserved for external DC reactor, connected with copper bus upon delivery
P/ B 1, B2	Reserved for external braking resistor(please refer to Table 1-7)
-DC	DC negative bus output terminals

U/T1, V/T2, W/T3	Three-phase AC output terminals

Terminal type 3

Applicable models: MV200G-4T37



Terminal	Function
R/L1, S/L2, T/L3	Three-phase AC 380V input terminals
+DC, B2	Reserved for external DC reactor
-DC	DC negative bus output terminals
U/T1, V/T2, W/T3	Three-phase AC output terminals

Note

MV200G-4T37 can not be common DC bus applications.

Terminal type 4

Applicable models: MV200G-4T45 ~ MV200G-4T55, MV200P-4T45 ~ MV200P-4T55

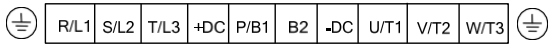

Terminal	Function
R/L1, S/L2, T/L3	Three-phase AC 380V input terminals
+DC, P/ B 1	Reserved for external DC reactor, connected with copper bus upon delivery
P/ B 1, B2	Reserved for external braking resistor(please refer to Table 1-7)
-DC	DC negative bus output terminals
U/T1, V/T2, W/T3	Three-phase AC output terminals

Terminal type 5

Applicable models: MV200G-4T75, MV200P-4T75 ~ MV200P-4T90

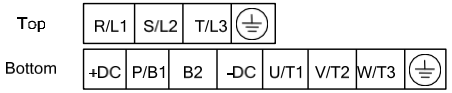

Terminal	Function
R/L1, S/L2, T/L3	Three-phase AC 380V input terminals
+DC, P/ B 1	Reserved for external DC reactor, connected with copper bus upon delivery
P/ B 1, B2	Reserved for external braking resistor(please refer to Tabble 1-7)
-DC	DC negative bus output terminals
U/T1, V/T2, W/T3	Three-phase AC output terminals

Terminal type 6

Applicable models: MV200G-4T90 ~ MV200G-4T315, MV200P-4T110 ~ MV200P-4T315

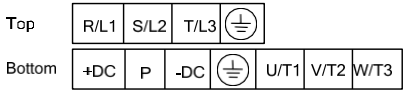

Terminal	Function
R/L1, S/L2, T/L3	Three-phase AC 380V input terminals
P, +DC	Reserved for external DC reactor, connected with copper bus upon delivery
P, -DC	Reserved for external braking resistor
-DC	DC negative bus output terminals
U/T1, V/T2, W/T3	Three-phase AC output terminals

Terminal type 7

Applicable models: MV200G-4T355 ~ MV200G-4T400, MV200P-4T355 ~ MV200P-4T400

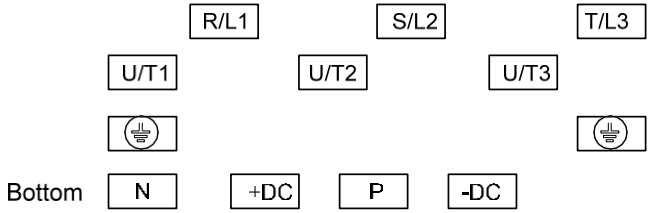

Terminal	Function
R/L1, S/L2, T/L3	Three-phase AC 380V input terminals
P, +DC	Reserved for external DC reactor, connected with copper bus upon delivery
P, N	Reserved for external braking resistor
-DC	DC negative bus output terminals
U/T1, V/T2, W/T3	Three-phase AC output terminals

Note

In the common DC bus application, the positive pole and the negative pole of the DC input should be connected to the terminals +DC and -DC respectively, and then the limiting current resistor used for protecting the rectifier inside drive will be valid when powering on.

3.1.2 Connecting drive and options

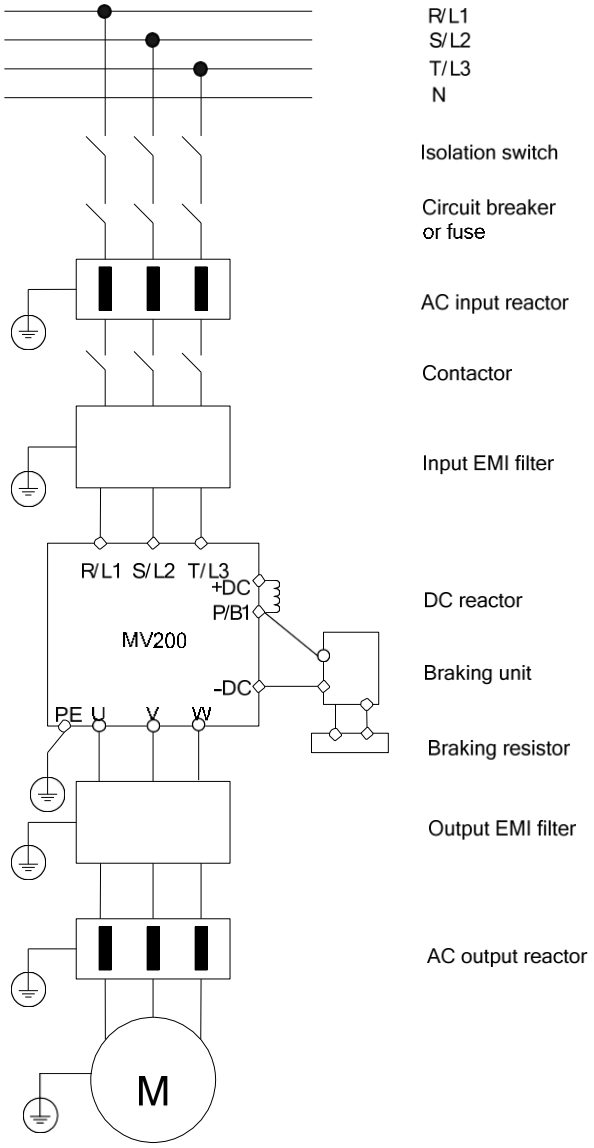

Fig. 3-2 Connection of drive and options

1. Isolation device (e.g., isolation switch) must be installed between the AC supply and the drive to ensure the personal safety during the equipment maintenance.

2. In North America, the delay type fuse (the current rated value of which should be 225% of the maximum full load output current value) should be used before the drive to isolate the faults caused by other equipments. For the selection of the fuse, please refer to Table 3-1.

Table 3-1 Recommended fuse capacity and cross section area of the copper-cored insulation wire

Model	Incoming line protection	Main circuit (mm^2)		Control circuit (mm^2)
	Fuse (A)	Input wire	Output wire	Control terminal wire
5.5P	15	2.5	2.5	1
5.5G	20	4	4	1
7.5G/7.5P	32	6	6	1
11G/11P/15P	35	6	6	1
15G/18.5G/18.5P	50	6	6	1
22P	63	16	16	1
22G/30P	80	16	16	1
30G/37G/37P	100	25	25	1
45P	100	35	35	1
45G/55G/55P	125	35	35	1
75P	160	35	35	1
75G/90P	200	70	70	1
90G/110P	250	70	70	1
110G/132G/132P	315	95	95	1
160P	400	150	150	1
160G/200P	450	185	185	1
200G/220P	560	240	240	1
220G/280P	630	150×2	150×2	1
280G/315G/315P	800	150×2	150×2	1
355P	800	150×2	150×2	1
355G/400P	800	150×2	150×2	1
400G	1000	150×2	150×2	1
Note: The parameters listed in this table are recommended values.				

3.When the contactor is used to control the AC supply, do not power on/off the drive directly through the contactor.

4. DC reactor

To prevent the influence of the AC supply on the drive, protect the drive and suppress the high-order harmonics, DC reactor should be configured in the following situations.

- If a capacitor tank used for reactive power compensation or a SCR load shares the same AC supply with the drive, the harmonics caused by the SCR load or the capacitor tank when it is switched on or off may damage the drive's input rectifying circuit.
- The unbalance of the three-phase power supply for the drive exceeds 3%.
- It is required to increase the drive input power factor to more than 0.93.
- When the drive is connected to a large-capacity transformer, the current in the input power circuit of the drive may damage the rectifying circuit. In general, when the power supply capacity of the drive is larger than 550kVA, or 10 times higher than the drive capacity, the drive needs to be configured with the DC reactor.

5. AC input reactor

An AC input reactor should be used if the distortion of the power grid is severe or the input current harmonic level is high even after a DC reactor has been connected to the drive. It can also be used to improve the AC input power factor of the drive.

6. AC output reactor

If the cable between drive and motor exceeds 80m, multi-stranded cables and an AC output reactor should be used to suppress the high frequency harmonics. Thus, the motor insulation is protected against heat due to harmonics, leakage current is reduced and the drive will not trip frequently.

7. Input EMI filter

Optional EMI filter may be installed to suppress the high-frequency noise interference from the drive power cable.

8. Output EMI filter

Optional EMI filter may be installed to suppress the high-frequency noise interference and leakage current at the drive output side.

9. Safe grounding wire

The drive has leakage current inside. To ensure the safety, the drive and motor must be grounded, and the grounding resistance shall be less than 10Ω. The grounding wire shall be as short as possible and its cross section area (CSA) should meet the requirements in Table 3-2.

Note: The values in the table apply only when the two conductors adopt the same metal. If not, the cross section area of the protective conductor shall be determined according to the equivalent conducting factor.

Table 3-2 Cross section area of grounding wire

CSA of phase cable S (mm^2)	Min. CSA of grounding wire Sp (mm^2)
S≤16	S
16＜S≤35	16
35＜S	S/2

Note

The input/output EMI filter shall be installed as close to the drive as possible.

3.1.3 Wiring for basic operation

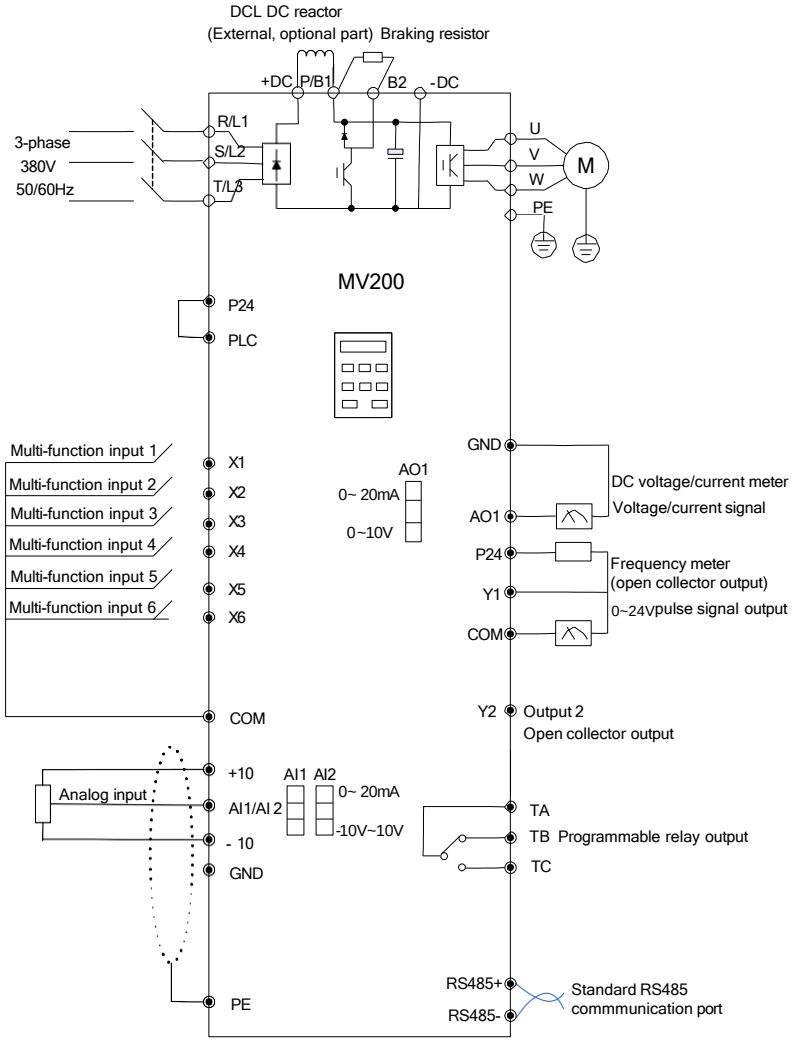

Fig. 3-3 Basic wiring diagram 1

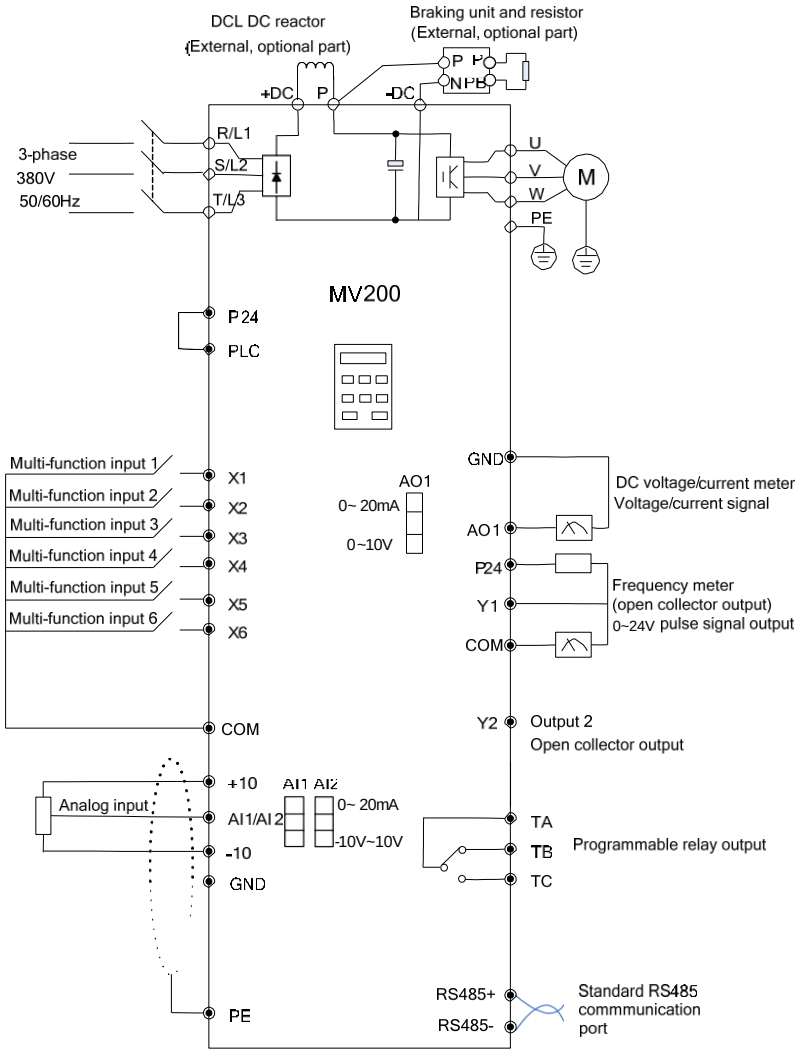

Fig. 3-4 Basic wiring diagram 2

Note:

1.For AI1 and AI2, the input voltage signal or the current signal can be selected via the jumper. The function code P10.00 shall be changed after the hardware jumper finished selection to ensure the correct input signal.

2.For AO1 , the output voltage signal or the current signal can be selected via the jumper, and the output range is selected and determined by the function code P10.22.

3.If external braking components need to be configured, the braking unit and braking resistor shall be used. Please pay attention to the positive and negative polarity when connecting the braking unit.

4. “ ○ ” in the figure is main circuit terminal and “ ◉ ” in the figure is control circuit terminal.
5. For the usage of the control circuit terminal, please refer to section 3.2.

6.Fig. 3-3 is the wiring diagram for basic operation of model 75kWG/90kWP and below, and Fig. 3-4 is the wiring diagram for basic operation of model 90kWG/110kWP and above, special attention should be paid to these models: 355 kWP, 355 kWG, 400 kWP, 400 kWG, the main circuit terminal of external braking unit is P, N.

2. Wiring and configuration of control circuit

1. The arrangement sequence diagram of the control circuit terminals

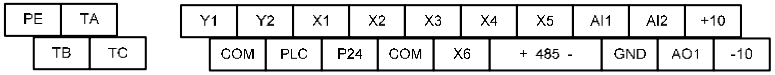

Fig. 3-5 The arrangement sequence diagram of the control circuit terminals

3.2.2 Wiring of control circuit terminals

Note

It is suggested to use the wire with cross section area over 1mm^2 as the connecting wire of the control circuit terminals.

For the terminal function description, please refer to Table 3-3.

Table 3-3 Table for the functions of interface board terminal

Type	Terminal	Name	Function	Specification
Shield	PE	Shield grounding	Used for the grounding of the shielded layer of the wire. The shielded layer of the analog signal wire, 485 communication wire and motor power wire can be connected to this terminal.	Connected to the main circuit wiring terminal ⏚ internally
Power supply	+10	+10V power supply	To provide +10V reference power for external load	Allowable maximum output current: 10mA
	-10	-10V power supply	To provide -10V reference power for external load	Allowable maximum output current: 10mA
	GND	+10V/-10V power GND	The reference ground for analog signal and +10V/-10V power	Internal isolated with COM

Type	Terminal	Name	Function	Specification
Analog input	AI1	Analog single-end input AI1	To receive the single-end analog voltage or current input with the analog input voltage/current selected via the jumper and the corresponding input type selected by the function code P10.00 (reference grounding: GND)	Input voltage range: -10V~10V (input resistance: 20kΩ), resolution: 1/4000 Input current range: 0mA~20mA (input resistance: 246Ω), resolution: 1/2000
	AI2	Analog single-end input AI2		
Analog output	AO1	Analog output 1	When providing the analog voltage/current output, it can represent 27 values.The analog output of the voltage/current is selected via the jumper, and the output range of the analog voltage/current is selected in the function code P10.22 (reference grounding: GND).	Voltage output range: 0/2~10V Current output range: 0/4~20mA
Communication	RS485+	RS485 communication interface	Positive end of 485 differential signal (reference grounding: GND)	Standard RS485 communication interface. Please use twisted pair wire or shielded wire.
	RS485-		Negative end of 485 differential signal (reference grounding: GND)	

Type	Terminal	Name	Function	Specification
Multi-functional input terminal	X1	Multi-functional input terminal 1	It can be set as the digital input terminal with multiple functions.The factory default settings for X1 and X2 are FWD (forward running command terminal) and REV (reverse running command terminal) respectively. The running command terminals can be set with other input terminals and can realize the “three-wire control” function with the third input terminal. For details, please refer to the introduction of the functions about input terminals P09.00~P09.05 and the introduction of the “two-wire control” and “three-wire control” functions (P09.08) in 6.7, “Digital input/output parameters” (Group P09) (common terminal: PLC or COM).	Opto-isolated input, please refer to the introduction to the multifunctional input/output terminal wiring Input resistance: R=3.1kΩ; maximum input frequency: 200Hz Input voltage range: 20V~30V 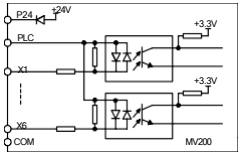
	X2	Multi-functional input terminal 2		
	X3	Multi-functional input terminal 3		
	X4	Multi-functional input terminal 4		
	X5	Multi-functional input terminal 5		
	X6	Multi-functional input terminal 6	In addition to acting as an ordinary multi-functional terminals (same as X1~X5), X6 can also be set as the high-speed pulse input terminal. For details, please refer to the introduction to the functions of input terminals P09.00~P09.05 in 6.7 “Digital input/output parameters” (Group P09) (common terminal: PLC).	The equivalent diagram for the optical coupling isolated input is shown as above, please refer to the introduction to wiring for the multi-functional input/output terminals. Input resistance: R=2kΩ Maximum input frequency: 100kHz Input voltage range: 20V~30V
Multi-functional output terminal	Y1	Open collector output terminal 1 / DO pulse output terminal	It can be set as the digital output terminal with multiple functions and also can be reused as DO pulse output terminal, which is selected by the function code P09.17. For details, please refer to the introduction to the functions of P09.18 or P09.29 in 6.7 “Digital input/output parameters” (Group P09) (common terminal: COM).	Opto-isolated output Maximum operating voltage: 30V Maximum output current: 50mA The DO pulse output frequency range depends on P09.30 and the maximum value is 50kHz
	Y2	Open collector output terminal 2	It can be set as the digital output terminal with multiple functions. For details, please refer to the introduction to the functions of P09.19 in 6.7 “Digital input/output parameters” (Group P09) (common terminal: COM).	Opto-isolated output Maximum operating voltage: 30V Maximum output current: 50mA
Power supply	P24	+24V power supply	To provide +24V power for external load	Maximum output current: 200mA

Type	Terminal	Name	Function	Specification
Common terminal	PLC	Multi-functional input common terminal	Common end of multi-functional input terminal (Short circuited with P24 upon delivery)	Common terminal of X1~X6, PLC is interally isolated with P24
	COM	+24V power common terminal	2 common terminals in total, used together with other terminals	COM is internally isolated with GND
Relay output terminal 1	TA	Relay output	It can be set as the digital output terminal with multiple functions. For details, please refer to the introduction to the functions of output terminals of P09.20 in 6.7 “Digital input/output parameters” (Group P09) (common terminal: COM).	TA-TB: normally closed; TA-TC: normally open Contact capacity: AC250V/2A（COS Φ=1） AC250V/1A（COS Φ=0.4） DC30V/1A For operating method, please refer to the description of P09. The over-voltage class for the input voltage of the relay output terminal is class II.
	TB			
	TC			

Analog input terminal wiring

When AI1 and AI2 terminals receive the single-end analog voltage or current input, with the voltage/current input selected via function code P10.00, the wiring mode is as shown in Fig. 3-6.

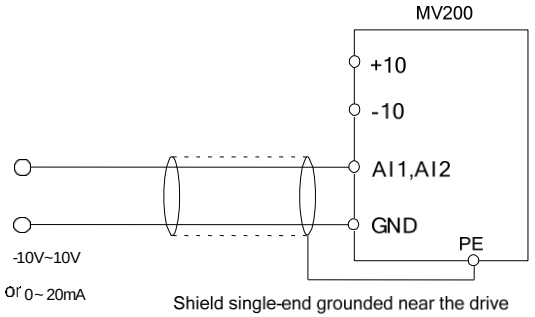

Fig. 3-6 Wiring diagram for AI1 and AI2 terminals

Analog output terminal wiring

The external analog meter of the analog output terminals AO1 can indicate various parameters. The analog output of the voltage/current is selected via the jumper, and the output range of the analog voltage/current is selected in the function code P10.22. The terminal wiring mode is as shown in Fig. 3-7.

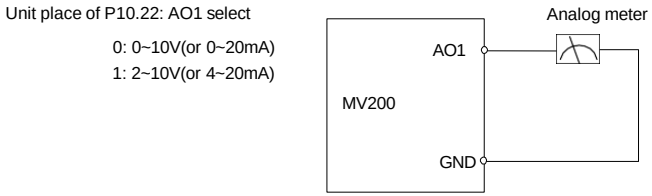

Fig. 3-7 Analog output terminal wiring

Note

1.When using analog input, filter capacitor or common mode inductor can be installed between the input signal and GND.

2. The voltage of the analog input signal shall not exceed 12V.

3.The analog input/output signal is vulnerable to external interference. Shielded cable shall be used and reliably grounded, and the wiring length shall be as short as possible.

4. The analog output terminal can withstand the voltage no more than 12V.

Communication interface wiring

MV200 drive provides the RS485 serial communication interface for the users. A control system of single host/single slave or single host/multiple slaves can be created through the following wiring methods. With the host device (PC or PLC) software, real time monitoring, remote control, auto control and more complicated running control (e.g., infinite multi-stage PLC running) can be realized on the drive within the network.

1. Connection of the drive and the host device with RS485 interface:

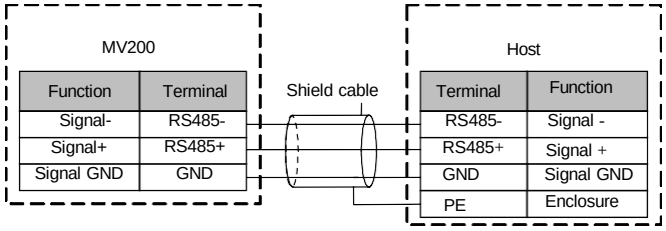

Fig. 3-8 RS485 communication wiring

2. Connection of the drive and the host device with RS232 interface:

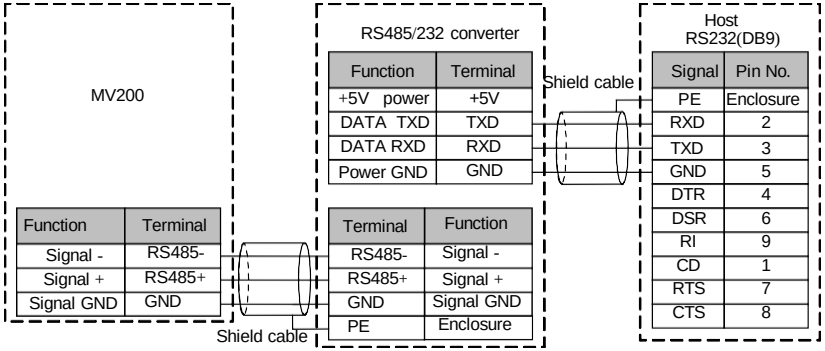

Fig. 3-9 RS485-（RS485/232）-RS232 communication wiring

3. Wiring for connecting several drives in the same RS485 system:

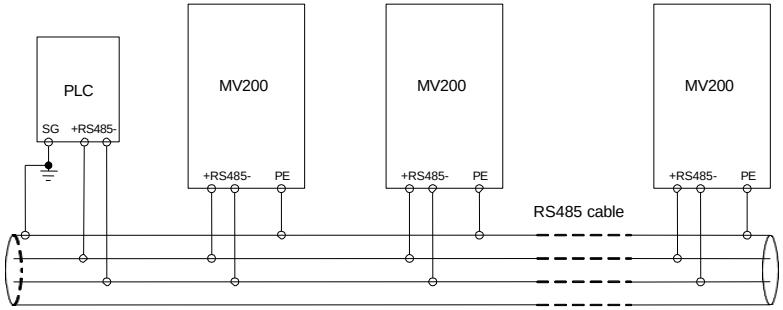

Fig. 3-10 Recommended wiring diagram for the communication between PLC and several drives

(the drives and motors are reliably grounded)

If normal communication still cannot be realized through the above wiring, take the following measures to correct it:

1 Provide separate power supply to the PLC (or host device) or isolate its power supply. In case the external interference is severe, to protect the PLC (or host device) from interference, isolate the communication wire.

2If the RS485/RS232 converter is used, provide separate power supply to the converter. 3）

Use magnetic ring on the communication wire.

4） If the field conditions permit, reduce the drive carrier frequency.

Note

1. In the applications with large interference, the RS485 converter with isolation shall be used.
2. The RS485 cannot withstand the voltage higher than 30V.

Wiring for Multi-functional input/output terminals

The multi-functional input/output terminals of MV200 include X1~X6. X1~X6 are opto-isolated circuits, as shown in the following figure. PLC is the common terminal for X1~X6. The typical wiring methods are as below:

1.Dry contact mode (X1~X6)

1) When using the internal +24V power supply of the drive, the wiring mode is as shown in Fig.3-11.

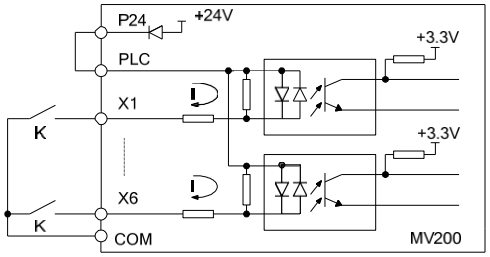

Fig. 3-11 The wiring mode when using the internal +24V power supply of the drive

2) When using the external power supply (which shall meet the UL CLASS 2 standard, and 4A fuse shall be installed between the power supply and the interface), the wiring mode is as shown in Fig.3-12 (be sure to remove the short circuit plate between PLC and P24).

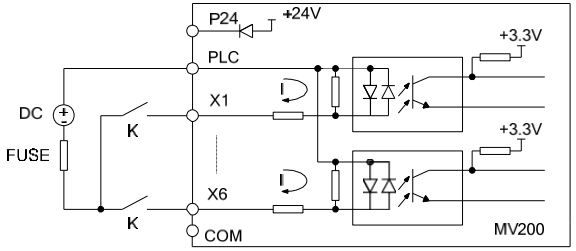

Fig. 3-12 The wiring mode when using the external power supply

2.Source (drain) mode

1) When the internal +24V power supply is used and the external controller is the NPN common emitter output, the wiring mode is as shown in Fig. 3-13.

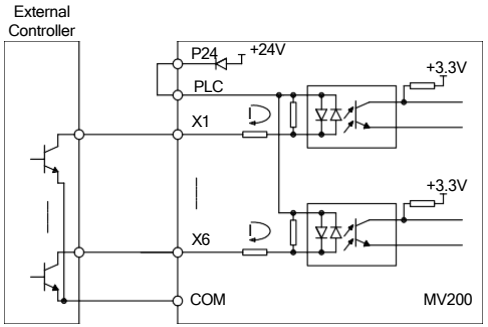

Fig. 3-13 The source connecting mode when using the internal +24V power supply of the drive

2) When the internal +24V power supply is used and the external controller is the PNP common emitter output (**note**: be sure to remove the short circuit plate between the user terminal PLC and P24 first, then connect it between PLC and COM terminals firmly), the wiring mode is as shown in Fig. 3-14.

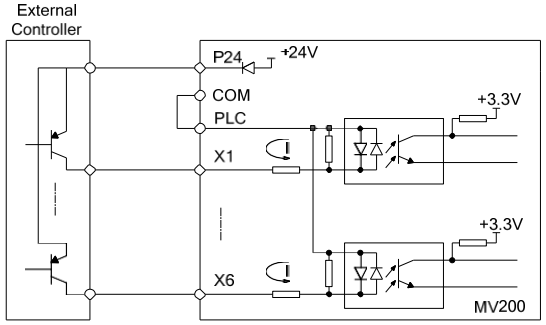

Fig. 3-14 The drain connecting mode when using the internal +24V power supply of the drive

3) The source connecting mode when using the external power supply (**note**: be sure to remove the short circuit plate between the user terminal PLC and P24) is as shown in Fig. 3-15.

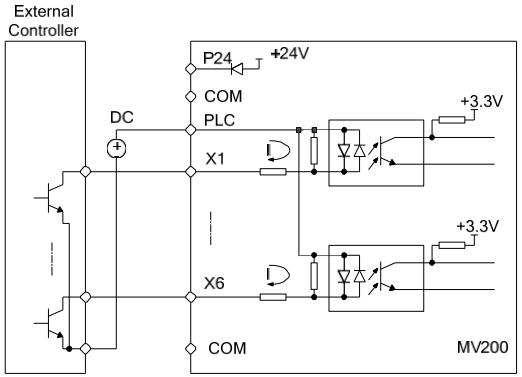

Fig. 3-15 The source connecting mode when using the external power supply

4) The drain connecting mode when using the external power supply (**note**: be sure to remove the short circuit plate between the user terminal PLC and P24) is as shown in Fig. 3-16.

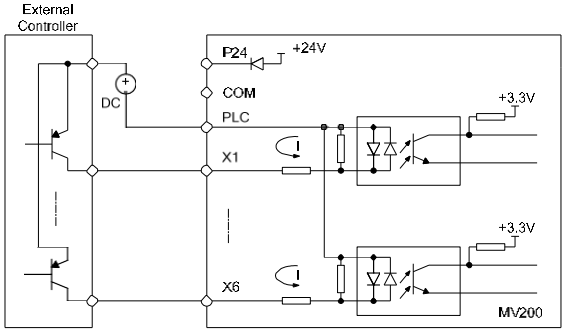

Fig. 3-16 The drain connecting mode when using the external power supply

Wiring for Multi-functional output terminals

1. When the Multi-functional output terminals Y1 and Y2 use the internal 24V power supply of the drive, the wiring mode is as shown in Fig.3-17.

Warning: The inductive load (such as relay) shall be anti-parallel with the fly-wheel diode!

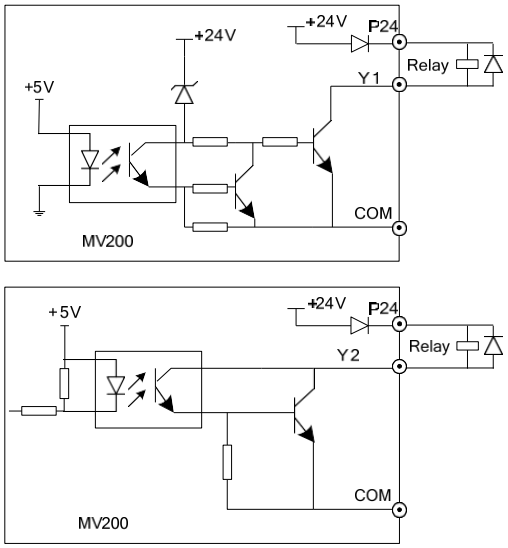

Fig. 3-17 Wiring mode 1 of Multi-functional output terminal

2. When the multi-functional output terminals Y1 and Y2 use the external power supply, the wiring mode is as shown in Fig.3-18.

Warning: The inductive load (such as relay) shall be anti-parallel with the fly-wheel diode!

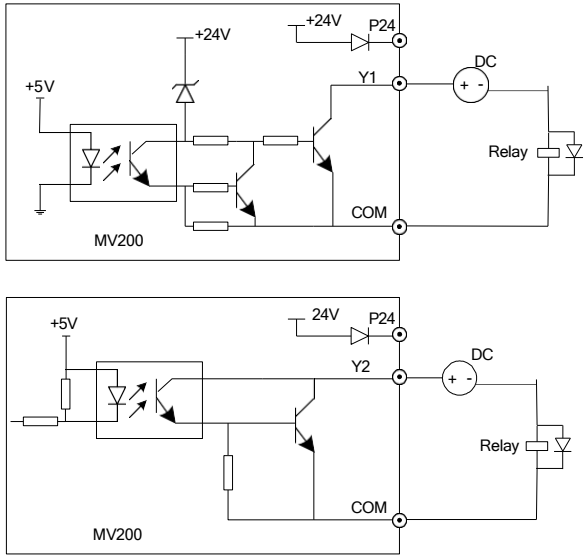

Fig. 3-18 Wiring mode 2 of multi-functional output terminal

3. When the digital pulse frequency output DO (Y1 terminal used as DO) uses the internal 24V power supply of the drive, the wiring mode is as shown in Fig.3-19.

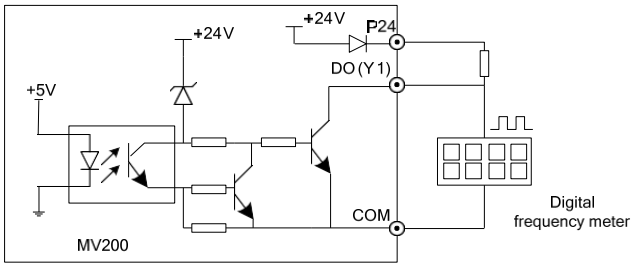

Fig. 3-19 Connecting mode 1 of output terminal DO

4. When the digital pulse frequency output DO (Y1 terminal used as DO) uses the external power supply, the wiring mode is as shown in Fig.3-20.

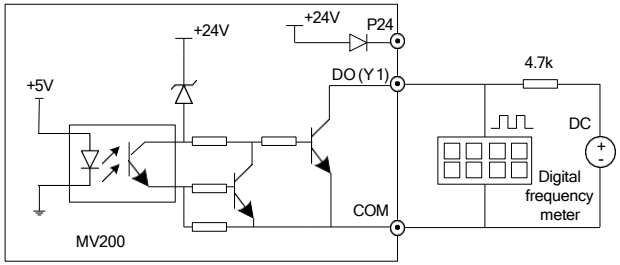

Fig. 3-20 Connecting mode 2 of output terminal DO

Wiring for relay output terminals TA, TB and TC

In the case of drive inductive load (e.g., electromagnetic relay, contactor), the surge absorption circuit shall be installed, such as the RC absorption circuit (whose leakage current shall be less than the holding current of the controlled contactor or relay), piezoresistor or fly-wheel diode (used in DC electromagnetic circuit, and correct polarity shall be ensured during the installation). The components of the absorption circuit shall be installed near the two ends of the windings of the relay or contactor.

Note

1. Do not short circuit the P24 terminal and COM terminal, otherwise, the control board may be damaged.

2.Please use the multi-core shielded cable or twist cable (cross section area: above 1mm^2) to connect the control terminals.

3.When using the shielded cable, the near end of the shielded layer (the end near the drive) shall be connected to the grounding terminal PE of the drive.

4.The control cables shall be kept away from the main circuit and strong current lines (including power cable, motor cable, relay cable, contactor connecting cable, etc.) for at least 20cm, and they shall not be laid in parallel pattern. It is suggested to adopt vertical wiring to avoid the drive mis-operation caused by interference.

5.For the non-24V relay, appropriate resistor shall be selected according to the relay parameters and connected in series to the relay circuit.

6. The digital output terminal cannot withstand the voltage higher than 30V.

3.2.3 Schematic diagram of control board

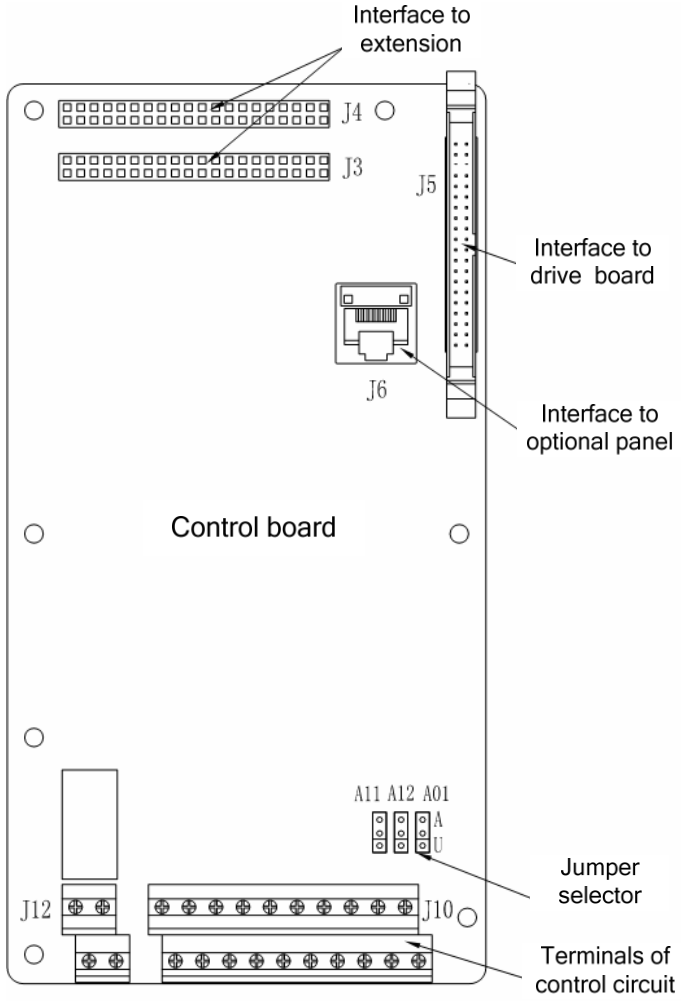

Fig. 3-21 Schematic diagram of control board

3.3 Installation method for EMC requirements

Because of the working principle of the drive, it is unavoidable to produce certain noise and cause EMC problems. To reduce the interference of the drive to the external world, the installation method will be detailed in this section for field installation reference, including the noise suppression, field wiring, grounding, leakage current, use of power filter etc.

3.3.1 Noise supression

The noise generated by the drive may affect the instrument and equipment nearby, and the influence is determined by various factors, including the noise immunity of the drive control system and the equipment, the wiring, the installation distance, the grounding method, etc.

Noise type

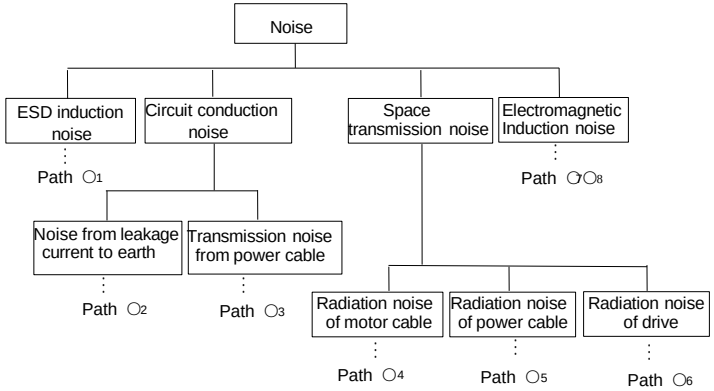

Fig. 3-22 Schematic diagram for noise classification

Noise transmission path:

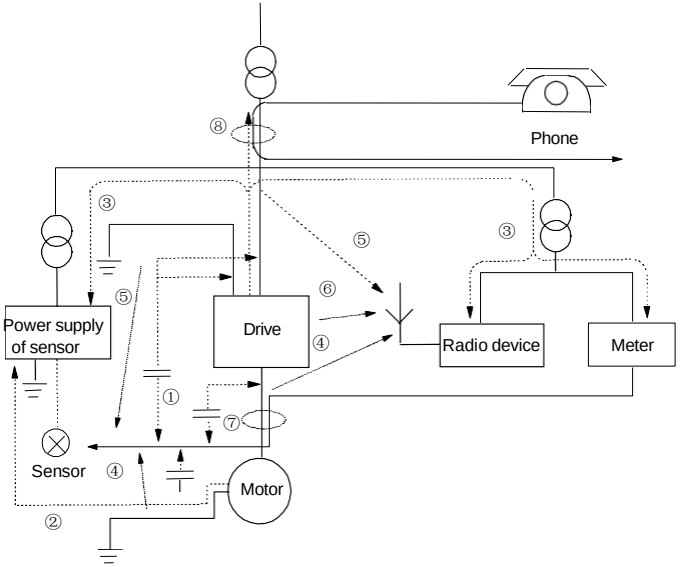

Fig. 3-23 Schematic diagram for noise transmission path

Basic policies for noise suppression:

Table 3-4 Table for noise suppression measures

Noise transmission path	Measure for reducing influence
②	If the external devices form a closed loop through the drive wiring, the drive grounding cable will have leakage current, which will cause the relevant device to mis-operate. The mis-operation can be reduced by removing the grounding.
③	When the external devices and drive share the same power system, the noise generated by the drive will transmit along the power cable in a reverse direction, causing all the other devices in the same system to mis-operate. The following measures can be taken to prevent it: installing the noise filter at the input end of the drive, isolating the noise for other devices with the isolation transformer or power filter.
④⑤⑥	If the devices for processing the weak signals of the measuring instruments, radio devices and sensors and their signal cables are installed in the same cabinet with the drive, and the wirings are close to each other, mis-operation may be caused due to the space noise influence. To deal with this problem, the following measures shall be taken: (1)The equipment and signal cables vulnerable to influence shall be kept far away from the drive. The signal cable shall adopt shielded wire, with the shielded layer grounded. Besides, the shielded cable shall be sleeved with metal tube and kept far away from the drive and its input/output wire. If the signal cable must pass the power cable, they shall adopt orthogonal layout. (2)Install the radio noise filter and linear noise filter (ferrite common mode choke) at the input and output ends of the drive to suppress the radiation noise of the power cable. (3)The motor cable shall be placed in the thick shelter, such as the pipe with large thickness (more than 2mm), or bured into the cement trough. The power cable shall be sleeved with metal pipe and grounded using shielded cable (the motor cable shall adopt 4-core cable, with one piece grounded at the drive side, and the other end connected to the motor enclosure)
①⑦⑧	If the signal cables are laid in parallel with the power cables or bundled together with the power cables, because of electromagnetic induction noise and static induction noise, the noise will transmit in the noise cable, causing mis-operation of the relevant equipment. Such wiring mode shall be avoided, the vulnerable equipment shall be kept far away from the drive, and vulnerable signal cables shall be kept far away from the drive input/output cable. The signal cable and power cable shall adopt shielded cable and be sleeved with metal tube respectively. The distance between the metal tubes shall be at least 20cm.

3.3.2 Field wiring requirements

To avoid the interference coupling, the control cable, power cable and motor cable shall be separately installed and kept away from each other, especially when the cables are parallel and extend for a long distance. If the signal cable must cross the power cable, make the crossing perpendicular.

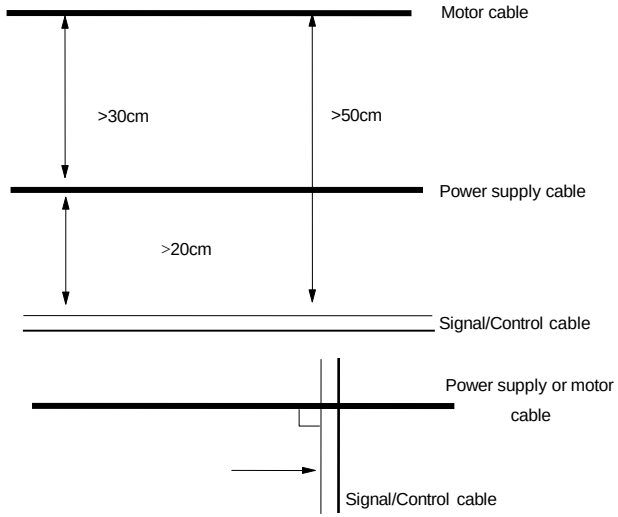

Fig. 3-24 System wiring requirement

If the motor cable is too long or the cross section area of the motor cable is too large, it shall be derated. The larger the cross section area is, the larger the ground capacitance and ground leakage current will be. If the cable with large cross section area is used, the output current should be reduced. Note that the current should be reduced by 5% for every increasing grade of the area.

Shielded/armoured cable: High-frequency low-impedance shielded cable shall be used, such as woven copper mesh, aluminum mesh or iron mesh.

Generally, the control cable should be shielded cable. The shielded metal mesh must be connected to the metal enclosure of the drive through the cable clamps on both ends.

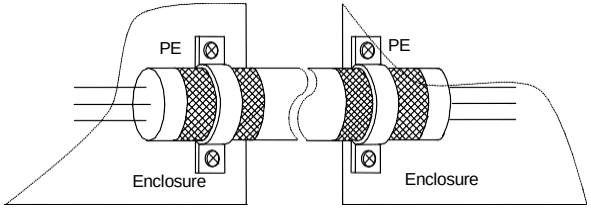

Fig. 3-25 Correct grounding method of shielding

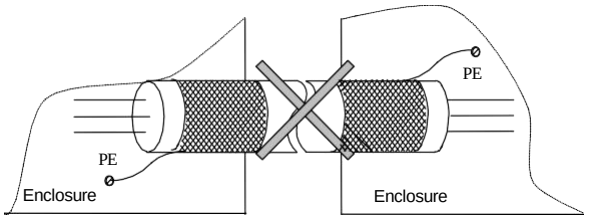

Fig. 3-26 Incorrect grounding method of shielding

3.3.3 Grounding

Dedicated grounding pole (the best)

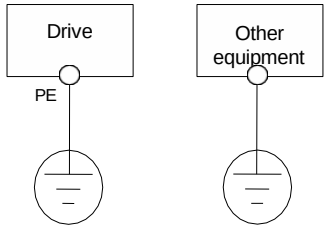

Fig. 3-27 Grounding diagram 1

Shared grounding pole (acceptable)

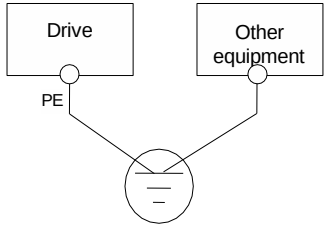

Fig. 3-28 Grounding diagram 2

Shared grounding cable (unacceptable)

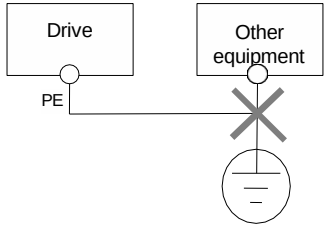

Fig. 3-29 Grounding diagram 3

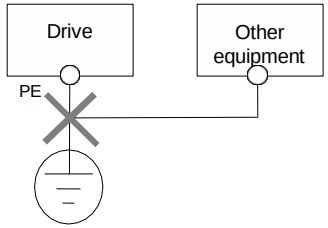

Fig. 3-30 Grounding diagram 4

In addition, please pay attention to the following points:

- To minimize the impedance of different grounding systems, the standard grounding cable of largest size shall be adopted. The flat cable is preferred, because the high-frequency resistance of the flat cable is smaller than the round cable of the same cross section area.
- For the 4-core motor cables, one piece of cables should be grounded at the drive side, with the other end connected to the motor grounding end. It would be better if the motor and drive have dedicated grounding pole.
- If the grounding ends of the system components are connected together, the leakage current will become a noise source and affect the equipment in the system. Therefore, the grounding end of the drive shall be kept away from the grounding ends of the audio equipment, sensor and computer.
- To reduce the high-frequency impedance, the fixing bolt of the equipment can be used as the high-frequency terminal for connecting to the back plate of cabinet. Note to scratch off the insulation paint of the fixing point.
- The grounding cable should be as short as possible, that is, the grounding point shall be as close to the drive as possible.

The grounding cable should be kept away from the I/O cables of the noise-sensitive equipment and be as short as possible.

3.3.4 Installation requirement for relay, contactor and electromagnetic braking unit

For the devices that will generate large noise, such as the relay, contactor and electromagnetic braking unit, even when they are installed outside the drive enclosure, surge suppressor must be installed.

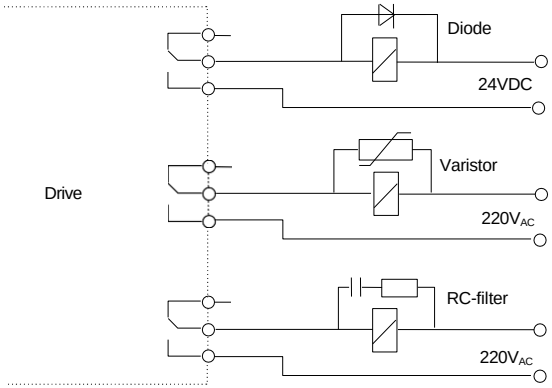

Fig. 3-31 Installation requirement for relay, contactor and electromagnetic braking unit

3.3.5 Leakage current and countermeasures

The leakage current will pass the line capacitor and motor capacitor at the input and output ends of the drive. Its magnitude depends on the distribution capacitor and carrier frequency. The leakage current includes the ground leakage current and line-to-line leakage current.

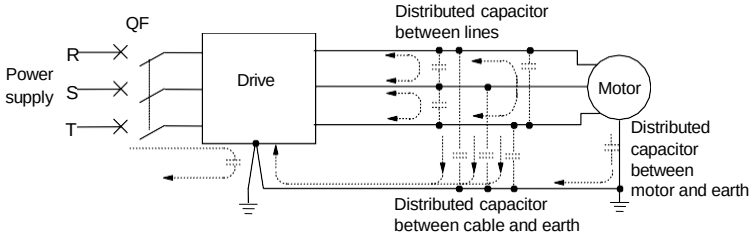

Fig. 3-32 Leakage current path

Grounding leakage current

The leakage current will not only pass the drive system, but also pass other equipment through the grounding wire, causing the mis-operation of the leakage circuit breaker, relay or other equipment. The higher the drive carrier frequency, or the longer the motor cable is, the larger the leakage current will be.

Suppression measures:

- Reduce the carrier frequency, but the motor noise will increase.
- Shorten the motor cable.
- Adopt the leakage circuit breaker designed for the leakage current of higher harmonics/ surge in the drive system and other system.

Line-to-line leakage current

The higher harmonics of the leakage current that passes the distribution capacitors between the output cables of the drive may cause the mis-operation of the external thermal relay. Especially the drives with small capacity (7.5kW and below), when the wires are very long (over 50m), the leakage current will increased relatively, which is easy to cause the mis-operation of the external thermal relay.

Suppression measures:

- Reduce the carrier frequency, but the motor noise will increase.
- Install reactor at the output end.

To reliably protect the motor, it is recommended to monitor the motor temperature with the temperature sensor, and use the overload protection function (electronic thermal relay) of the drive instead of the external thermal relay.

3.3.6 Proper EMC installation of drive

Partition principle

In the drive system formed by the drive and motor, the drive, control unit and sensor are installed in the same cabinet. The noise is mainly suppressed at the main connection points, therefore, radio noise filter and incoming reactor shall be installed in the cabinet. The cabinet shall also meet the EMC requirement.

To isolate the noise source and noise receiver through physical space in the mechanical/system stage is the most effective but most expensive measure to reduce the interference. In the drive system formed by the drive and motor, the noise source includes the drive, braking unit and contactor. The noise receiver includes the automation device, encoder, and sensor.

Different EMC zones are divided according to the electric characteristics in the mechanical/system design. It is recommended to install the device in the zone as shown in Fig.3-33.

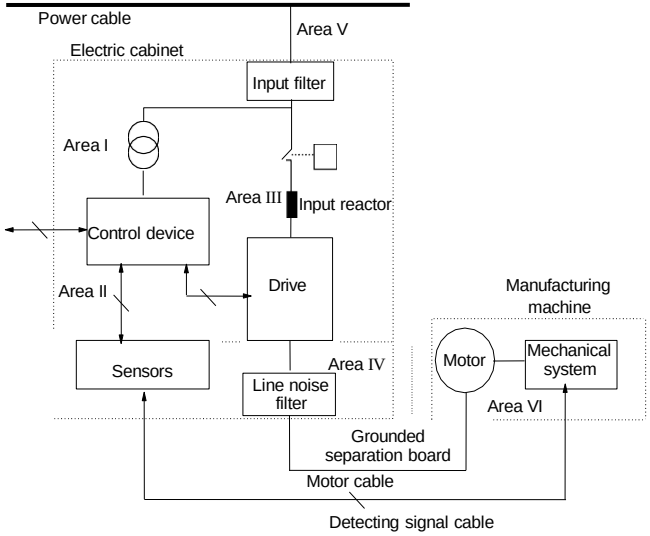

Fig. 3-33 Schematic diagram for the recommended partition for drive EMC installation

Note:

Area I: the control power transformer, control system, sensor, etc.

Area II: the interface for the signal and control cables, which shall have certain immunity

Area III: incoming reactor, drive, braking unit, contactor, and other noise source

Area IV: output noise filter and its wiring

Area V: power supply (including the radio noise filter wiring)

Area VI: motor and its cable

- There shall be space isolation between the zones to realize electromagnetic decoupling.
- The minimum spacing between the zones shall be 20cm.
- The zones shall be decoupled via the grounding plate. Cables of different zones shall be laid in different cabling troughs.
- The filters shall be installed at the interfaces between the zones.
- All the communication cables (e.g., RS485) and signal cables leading out from the cabinet must be shielded.

Electric installation diagram for the drive

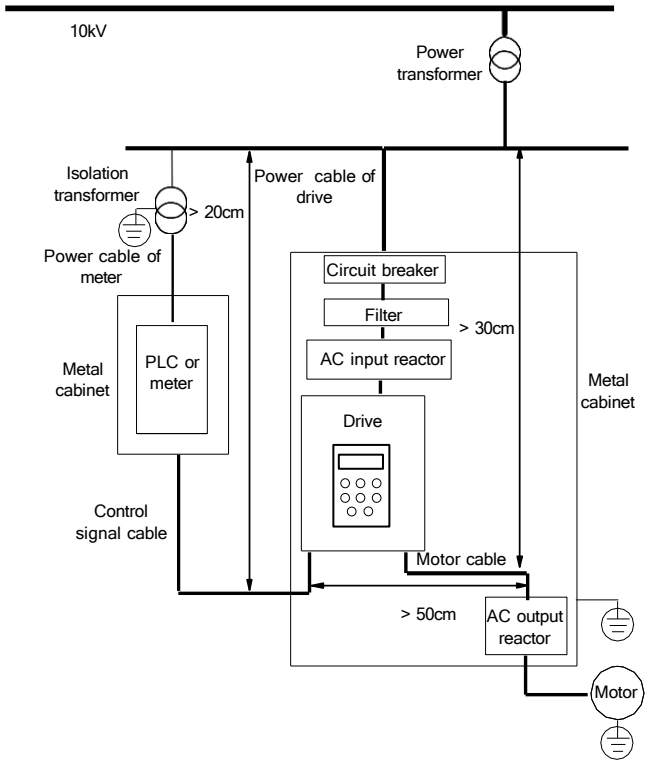

Fig. 3-34 Installation diagram for the drive

The grounding wire of the motor shall be grounded at the drive side. The motor and the drive shall be separately grounded.

The motor cable and control cable should use shielded/armoured cable. The shielding metal mesh shall be connected to the both ends of the grounding cable through cable clamps to avoid the twisting of the ends of the metal mesh, because in this case, the shielding effect will be affected in the high-frequency conditions.

The conductivity between the mounting plate, the mounting screws and the drive metal enclosure shall be ensured. Teeth paint scraping and conductive mounting plate shall be used.

If there is any sensitive device, separate power filter can be installed at the sensitive device side to reduce the cost.

3.3.7 Operation instructions for power filter

Power filter shall be used for the device that can generate strong interference and the device sensitive to external interference. The power line filter is a two-way low-pass filter. It allows the DC or 50Hz industrial frequency current to pass, but does not allow the high-frequency electromagnetic current to pass.

Role of the power line filter

It can help the device meet the EMC requirement on conduction emission and conduction sensitivity and contribute to suppressing the radiation emission of the device.

It can prevent the electromagnetic interference of the device from entering the power line, and the interference of the power line from entering the device.

Common errors in the power line filter installation

1. Too long power input line

The filter shall be installed close to the power cable inlet of the cabinet, and the power input cable of the filter shall be as short as possible in the cabinet.

2. The input cable and output cable of the power cable filter are too close to each other

If the input cable and output cable of the filter are too close to each other, the high-frequency interference signal will be directly coupled through the input and output cables of the filter and bypass the filter, making the filter useless.

3. Poor filter grounding

The filter enclosure must be reliably connected to the metal enclosure. There is a dedicated grounding terminal on the filter enclosure. However, if the filter is connected to the metal enclosure through a cable, it is useless for the high-frequency interference signal, because the resistance of the long cable (which is not the resistance of the resistor) is very large, making the bypass ineffective. The correct installation method is to directly install the filter enclosure against the conducting surface of the equipment metal enclosure, with the relevant insulating paint removed.

3.3.8 Drive radiation emission

Because of the working principle of the drive, is unavoidable for the drive to emit radiation. The drive is generally installed in the metal enclosure, and thus has little radiation influence on the instruments and equipments outside the metal enclosure. The external connecting cable is the main source for radiation

emission. If the relevant cable is connected according to the requirement in this section, the cable radiation emission can be effectively suppressed.

If the drive and other control devices are installed in the same metal enclosure, the above-mentioned partition principle shall be considered when designing the cabinet. The partition isolation, wiring, shielding and connecting of the cables shall also be considered.

Chapter 4 Quick Operation Guide for Drive

1. Drive operation panel

1. Introduction to drive operation panel

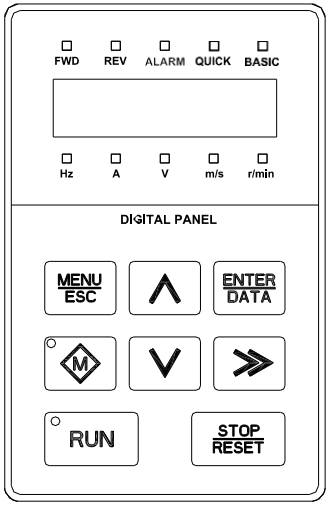

Fig. 4-1 Schematic diagram of operation panel

4.1.1.1 LED description

Table 4-1 LED description

LED symbol		Name	Meaning	Color
Unit LED	Hz	Frequency LED	On: Current parameter displayed represents the running frequency Flash: Current parameter displayed represents the frequency set	Green
	A	Current LED	On: Current parameter displayed represents the current	Green
	V	Voltage LED	On: Current parameter displayed represents the voltage	Green
	m/s	Line speed LED	On: Current parameter displayed represents the line speed	Green
	r/min	Rotating speed LED	On: Current parameter displayed represents	Green

			the rotating speed	
Status LED	FWD	Forward running LED	On: In the stop status, it means the drive has forward running command In the running status, it means the drive is running forward Flash: The drive is switching from FWD to REV	Green
	REV	Reverse running LED	On: In the stop status, it means the drive has reverse running command In the running status, it means the drive is running reversely Flash: The drive is switching from REV to FWD	Green
	ALARM	Alarm LED	On: The drive enters the alarm status	Red
	QUICK	Menu mode LED	QUCIK LED BASIC LED Menu mode On Off Quick menu Off On Basic menu	Green
	BASIC		Off Off Verification menu	Green

The running status LED is above the RUN key and the running command channel LED is above the Multi-functional key (M key). Their indication meanings are as shown in Table 4-2.

Table 4-2 Status LED description

LED	Display status	The indicated status of the drive
Running status LED	Off	Stop status
	On	Running status
Running command channel LED	On	Operation panel control status
	Off	Terminal control status
	Flash	Serial port control status

4.1.1.2 Introduction to operation panel keys

Table 4-3 Operation panel function table

Key	Name	Function
MENU/ESC	Program/exit key	To enter or exit the programming state
ENTER/DATA	Function/data key	To enter the lower level menu or confirm data
∧	Increase key	To increase the data or function code
∨	Decrease key	To decrease the data or function code
≫	Shift key	To select the bit for change in the data in editing state, or switch the display of status parameters in other state
M	Multi-functional key	Please refer to Table 4-4 for the useage of the Multi-functional key
RUN	Run key	When pressing this key in the operation panel mode, the drive will start to run
STOP/RESET	Stop/reset key	Stop or fault reset

Table 4-4 Useage of the Multi-functional key

Multi-functional key (M key)	Function	Function meaning
0	No function	The M key is disabled.
1	JOG	The M key is used as JOG key. In the operation panel running command channel, press this key and hold, the drive will run in real time JOG mode. Release this key, it will stop running in JOG mode.
2	FWD/REV running direction	The M key is used as the direction switching key FWD/REV. In the operation panel running command channel, it can be used to switch the output frequency direction on line.
3	Command channel switching 1	The M key is used as the running command channel switching key, which is enabled only in the stop status. The running command channel switching order is as follows: Operation panel running command channel (LED of M key on) → terminal running command channel (LED of M key off) →serial port running command channel (LED of M key flash) → operation panel running command channel (LED of M key on)
4	Command channel switching 2	Using the M key as the running command channel switching key, which is enabled in both stop and running statuses. The switching order is as above.
5	Keyboard locking function	The M key is used as the multi-functional keyboard locking key. Now, press the M key and press the ∧ key three times at the same time to lock the keyboard. The locking mode of the keyboard depends on the thousands place of the function code. To unlock the keyboard, set the thousands place as 5, press the M key and press the∨ key three times at the same time, then the keyboard will be unlocked. Set the thousands place as 0,there is no keyboard locking function.
6	Emergency stop	Using the M key as the emergency stop key. When it is used in this way, once it is pressed, the drive will stop addorcing to the setting time of P08.23 in any running mode.
7	Coast to stop	The M key is used to coast to stop. When it is used in this way, once it is pressed, the drive will coast to stop in any running mode.

4.1.1.3 Status display of operation panel

The display status of the MV200 operation panel includes stop status parameter display, run status parameter display, function code parameter editing status display and fault alarm status display.

1. Stop parameter display status

When the drive is in stop, the operation panel displays the stop status parameter, as shown in Fig.4-2a. The lower unit LEDs show the parameter units, while the upper QUICK and BASIC combination indicates the current menu mode.

When the verification menu is selected, only the function codes whose parameter value is different from the leave-factory value will be displayed. You can press the ∨ or ∧ key to browse all the function codes whose parameter set value is different from the leave-factory value, and check which parameters have been changed.

Different stop status parameters can be cyclically displayed by pressing the ≫key (defined by function code P16.02).

2. Run parameter display status

When the drive receives the valid running command, it will enter the run state, the operation panel will display the running status parameter, and RUN LED on the panel will be on, and ON/OFF of the FWD and REV LEDs depend on the current running direction. As shown in Fig.4-2b, the lower unit LEDs display the parameter units.

When the ≫ key is pressed, the running status parameters will be cyclically displayed. The running status parameters that can be viewed are defined by the function codes P16.00 and P16.01.

3. Alarm display status

When the drive detects abnormal conditions during running but it can still continue to run, it will enter the alarm display status. The upper Alarm LED will be on, and the corresponding alarm code will be displayed on the operation panel, as shown in Fig. 4-2c:

When the ≫ key is pressed, the running status parameters and alarm code will be cyclically displayed. When there are several alarms, the operation panel will cyclically display each alarm code at preset intervals.

To continue running, you can disable the fault alarm and stop by setting the protection action P97.00 and P97.01. The alarm will disappear during running, and the system enters the normal running parameter display status. If the alarm still exists before stop, the corresponding fault code will be automatically displayed upon stop.

The alarm status can be treated as a special fault status. Same as the fault status, you cannot adjust the frequency parameters through the ∨or ∧ key in the alarm state. You must switch to the run parameter display status by pressing the ≫key before you can use the ∨or ∧ key to adjust the set frequency parameters.

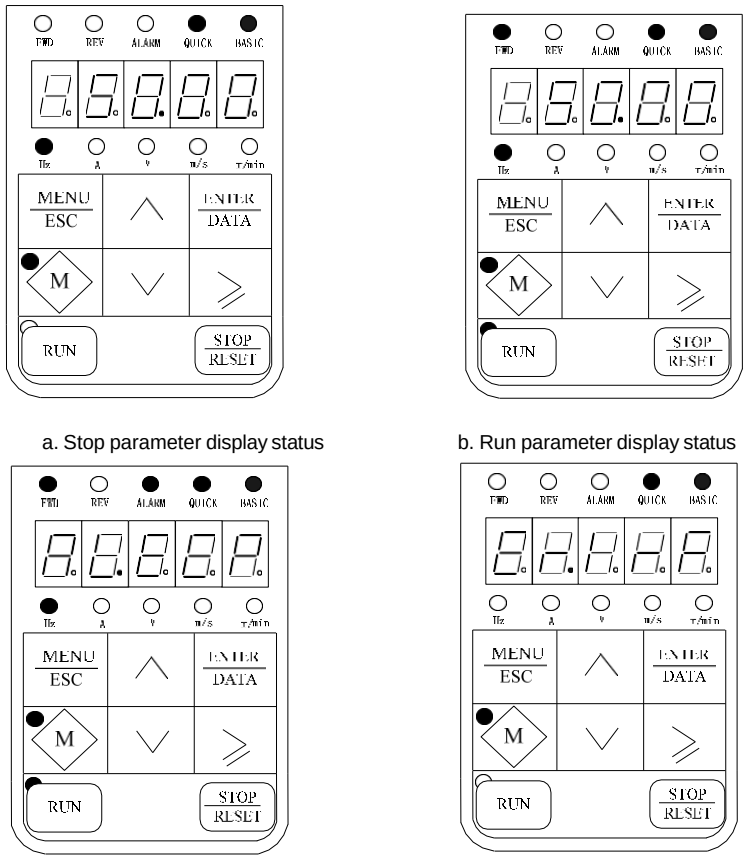

a. Stop parameter display status

b. Run parameter display status

c. Alarm display status

d. Fault display status

Fig. 4-2 The stop, run, alarm and fault display of the drive

4. Fault display status

When the drive detects a fault signal, it will immediately enter the fault alarm display status (as shown in Fig.4-2d), and the fault code will be displayed in flashing mode.

The stop parameters and fault code will be cyclically displayed by pressing the ≫ key. The fault reset operation can be conducted through the STOP/RESET key on the operation panel, the control terminal or the communication command. If the fault still persists, the display of the fault code will be maintained.

5. Function code editing status

Press the MENU/ESC key in stop, run or fault alarm state, you can enter the editing state (if there is any user password, please refer to the description of P00.01). The editing status will be displayed in two-level menu mode, shown as below: function code group or function code → function code parameter. Press the ENTER/DATA key to enter the function parameter display status. In the function parameter display status, press the ENTER/DATA key to save the parameter, press MENU/ESC to exit.

4.1.2 Indentification of LED display symbols

The correspondence relation between the LED display symbols and the character/figure is as shown below:

LED Display	Meaning	LED Display	Meaning	LED Display	Meaning	LED Display	Meaning
	0		A		I		S
	1		b		J		T
	2		C		L		t
	3		c		N		U
	4		d		n		V
	5		E		O		y
	6		F		o		-
	7		G		P		
	8		H		q		
	9		h		r		

3. Operation example

In the below example, the stop display parameter is the set frequency and its leave-factoryvalue is 50.00Hz. The black part in the figure indicates the current editing status.

1. Operation of password

To protect the parameters, the drive has the password protection function. After setting the user password, only when you have entered the correct user password you can enter the function code editing status after pressing the MENU/ESC key. To enter the manufacturer set parameter zone, correct manufacturer password shall be input.

Note

It is recommended the user not change the manufacturer set parameters. Improper parameter setting will cause abnormal operation or even damage of the drive.

Function code P00.01 can be used to set the user password.

Assuming that the valid user password is “1368”, the drive is locked at this time, and no operation can be performed. You can unlock the drive by entering the user password through the following steps:

1. Press the MENU/ESC key in the drive locked status, and then the LED will enter the password verification status 00000.
2. Change 00000 to 01368.
3. Press the ENTER/DATA key to confirm and pass the password verification, and then the LED displays the P00.02.

The above operation steps are shown in the Fig. 4-3.

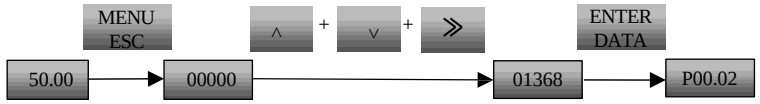

Fig. 4-3 Operation example for unlocking user password

You can conduct various operations on the drive after passing the password verification.

Note

If there is no key-pressing operation in 5 minutes after the correct user password is entered, the password protection will again be triggered to lock the drive.

4.1.3.2 Key locking and unlocking

Key locking

The operation panel can be locked through the function code P00.04.

1. In the stop parameter display state, press MENU/ESC key to enter the first level menu P00.00;
2. Press the ∧ key to select function code P00.04;
3. Press the ENTER/DATA key to enter the second level menu;
4. Press the ≫ key to switch to the thousands place;
5. Press the ∧ key to set the thousands place to be 0 (lock all), 1 (lock all the keys except the STOP key), 2 (lock all the keys except the SHIFT key) or 3 (lock all the keys except the RUN & STOP key);
6. Press the ENTER/DATA key to confirm and return to the first level menu;
7. Press the MENU/ESC key to return to the stop parameter display status;
8. Press and hold the M key, and then press the ∧ key three times again to lock the operation panel.

The above operation steps are shown in the Fig. 4-4.

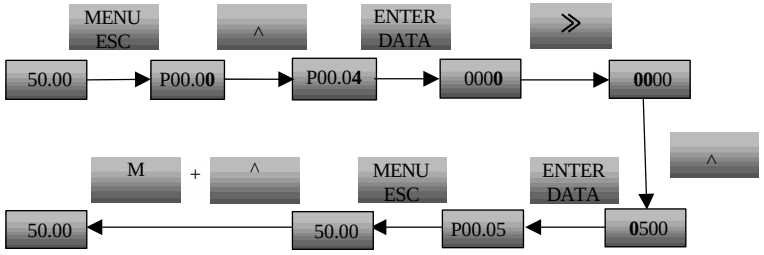

Fig. 4-4 Operation example for locking the operation panel keys

Key unlocking

When all the keys on the operation panel are locked, they can be unlocked through the following operation: Press and hold the M key, and then press the ∨ key for 3 times.

Note

No matter how P00.04 is set before, the operation panel is in unlocking status upon the power-up of the drive.

4.1.3.3 Operation panel self-detection

Before using the operation panel, you can check if the digital tube, LED and key functions are normal through the self-detection function of the MV200 operation panel. Operate according to the following steps:

1.Press and hold the ENTER/DATA key in the stop status, and then press the STOP/RESET key to enter the self-detection status.

During the self-detection, the 5 LED digital tubes on the operation panel will turn on one by one, and then all the LEDs will turn on, with the LED displaying “00000”.

2. Press the ∧ key, ENTER/DATA key, M key, ∨ key, ≫ key, RUN key and STOP/RESET key in turn. In normal situation, when the ∧ key is pressed, the LED display will change from “00000” to “11111”, and change correspondingly following the key pressing, until it displays “77777” when the STOP/RESET key is pressed.

3.Press the MENU/ESC key, and the LED will return to the stop parameter display status. The self-detection is completed.

The above operation steps are shown in Fig. 4-5.

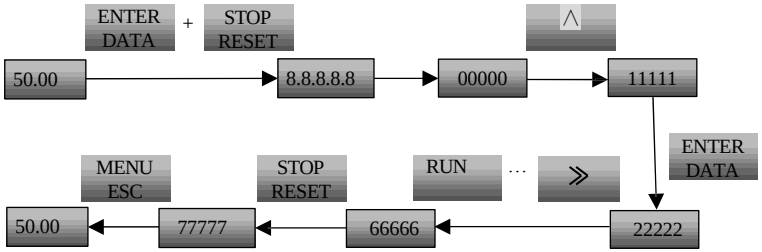

Fig. 4-5 Self-detection example of LED operation panel

4.1.3.4 Restore to leave-factory values

For example, set P00.05=2, the parameters will restore to the leave-factory values. The leave-factory value setting will make the drive parameters restore to the leave-factory values.

1. In the stop parameter display status, press MENU/ESC key to enter the first level menu P00.00;
2. Press ∧ key to change P00.00 to P00.05;
3. Press the ENTER/DATA key to enter the menu;
4. Press the ∧ key to change 0 to 2;

5. Press the ENTER/DATA key to confirm the change and return the first level menu. The change is successfully completed.

The above operation steps are shown in Fig. 4-6.

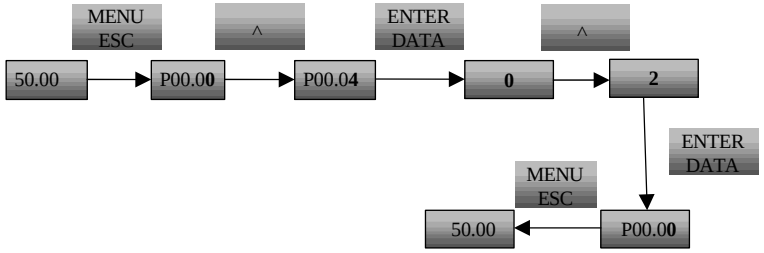

Fig. 4-6 Operation example of restoring leave-factory values

4.1.3.5 Setting the set frequency

For example, set P02.05=25.00Hz.

Example: To change the setting of function code P02.05 from 50.00Hz to 25.00Hz.

1. In the stop parameter display status, press MENU/ESC key to enter the first level menu P00.00;
2. Press the ≫ key to select the second highest bit;
3. Press ∧ key to change P00.00 to P02.00;
4. Press the ≫ key to select the unit place;
5. Press ∧ key to change P02.00 to P02.05;
6. Press the ENTER/DATA key to enter the second level menu;
7. Press the ∨ key to change 50.00 to 25.00;
8. Press the ENTER/DATA key to confirm the change and return the first level menu. The change is successfully completed.

The above operation steps are shown in Fig. 4-7.

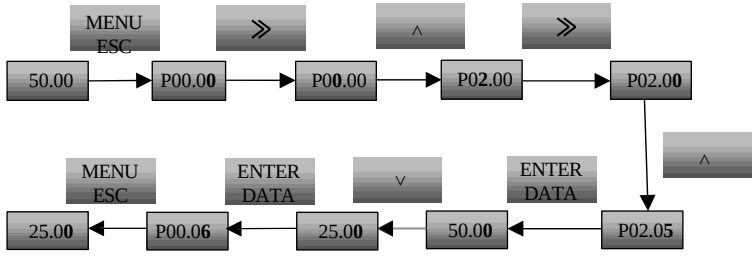

Fig. 4-7 Operation example for setting the set frequency

4.1.3.6 Switching status display parameters

The drive parameters displayed on the operation panel when the drive is stopped can be set through function code P16.02, such as the frequency, bus voltage, etc. (For details, please refer to the description of function

codes of Group P16). These status parameters can be viewed by pressing the ≫ key on the operation panel when they have been set. The example for the status parameter display in the drive stop status when P16.02 is FFF is as shown in Fig.4-8.

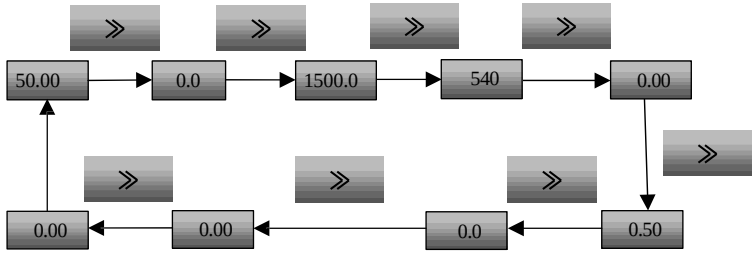

Fig. 4-8 Operation example for switching status parameter display

2. Drive running mode

The terms describing the drive control, running and status will appear in the following chapters. Please read carefully this chapter. It will help you understand and properly use the functions described in the following chapters.

1. Drive running command channel

The drive running command channel refers to the physical channel for the drive to receive the running command: start, stop, jog, etc. There are four types of running command channels:

1. Operation panel: To control through the RUN, STOP and M (when set as the JOG function) keys on the operation panel.
2. Control terminal: To control through the control terminals X1, X2 (default, other digital input terminals can be set as FWD and REV input control terminals as well), COM (two-wire system) and Xi (three-wire system).
3. Serial port: To control the start and stop through the host device.
4. Field bus: To control the start and stop through the field bus (Profibus-DP, CanOpen, etc.).

The command channel can be selected through function code P02.02, the PANEL/REMOTE key on the operation panel, and the multi-functional input terminals (functions No. 38, 39 and 40 are selected through P09.00~P09.05).

Note

Before switching the channels, be sure to conduct the switching trial operation first, otherwise, equipment damage or human injury may be caused.

---

2. Operating status of the drive

The operating states of the MV200 include the stop status, running status and motor parameter auto-tuning status.

1. Stop status: If there is no running command input when the drive is started and initialized, or the stop command is executed during the operation, the drive will enter the stop status immediately.
2. Running status: The drive will enter the running status after receiving the running command.

3. Motor parameter auto-tuning status: If there is any running command after the function code P03.24 is set as 1 or 2, the drive will enter the motor parameter identifying status. It will enter the stop status after the parameter identification is completed.

3. Drive control mode

Control mode

High-performance open-loop flux vector control: refers to the vector control without the speed sensor. The PG is not installed, but it has high control performance, low frequency high torque and high constant speed precision. It can realize precise motor speed control.

4. Drive frequency channel

There are five running modes for the MV200 drive under the speed control mode, including: jog running, process closed loop running, PLC running, multi-stage speed running and common running. The jog running has the top priority, other modes low priority. If there is no jog running command, select the mode according to P02.04 channel. The priority is as shown in Fig.4-9.

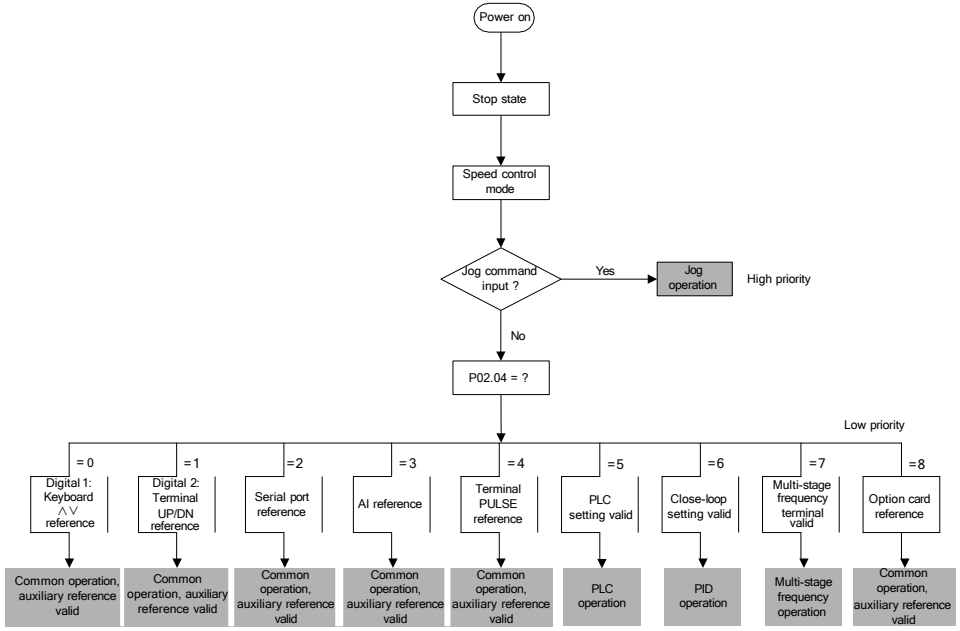

Fig. 4-9 Running mode selection

The five running modes provide five basic frequency sources. Except that the auxiliary frequency superimposition, frequency adjustment can be performed for common running frequency, “jog running”, “PLC running”, “multi-stage running" or “process closed loop running" can be served as an independent running channel, among which, “PLC running” has various frequency source reference channel. For details, please refer to “PLC running” frequency reference selection function code. The running modes are described below:

1) Jog running: When the drive receives the jog running command in stopping state, it will run according to the jog frequency (refer to function codes P11.16~P11.18).

2) Process closed loop running: When the process closed loop selection function is enabled (P02.04=6), the drive will adopt the process closed loop running mode, that is, it will conduct closed loop adjustment according to the reference and feedback (refer to function code of Group P14). The process closed loop running mode can be disabled via the multi-functional terminal (function no. 29). If there is a running command at that moment, it will run at 0 Hz.

3) PLC running: When the PLC function selection is enabled (P02.04=5), the drive will select the PLC running mode and run according to the preset running mode (refer to the description of the function codes of P13.16~P13.46). 。

4) Multi-speed running: The multi-speed function selection can be enabled (P02.04=7) via the ON/OFF combinations of the multi-functional terminals (functions 6, 7, 8 and 9), multi-stage frequency 1~15 (P11.01~P11.15) can be selected for multi-speed running. **Note**: Only when 0 is selected for P11.00 the multi-functional terminal input can be enabled, the multi-stage frequency setting is the maximum frequency percentage, if it is negative, then the frequency will run reversely. If all the three terminals are in OFF status or fail to meet the above conditions, the multi-speed will run at the main reference frequency digital set value (P02.05).

Note

For the specific frequency reference channels of each running mode under the speed control mode, please refer to *Chapter 6 Parameter Description*.

3. Initial power-up

1. Inspection before power-up

Conduct wiring connection according to the technical requirements specified in chapter 3 wring of drive.

2. Initial power-up operation

When the drive passes the wiring and power supply inspection, turn on the circuit breaker of the AC power supply at the drive input side to apply power to the drive. The operation panel of the drive will first display “8.8.8.8.8”, and then the contactor will normally engage. When the characters displayed in the digital tube change into the set frequency, it indicates that the drive initialization is finished.

If the LED above the M key on the operation panel is ON, it indicates that it is in the operation panel control status.

The initial power-up process is as shown in Fig.4-10.

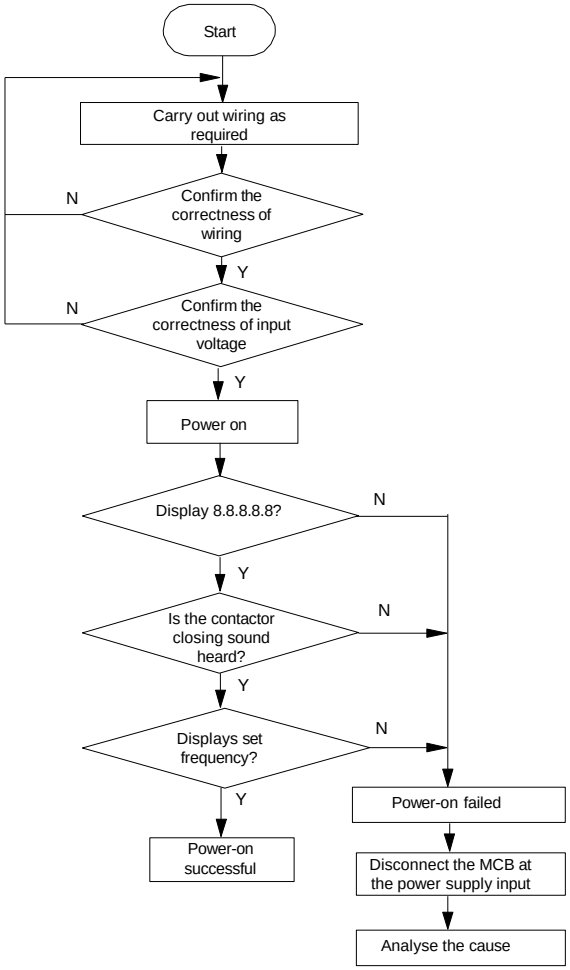

Fig. 4-10 Initial power-up operation process for drive

Chapter 5 Parameter List

Explanation to the terms in the function code parameter table

Table field	Explanation
Function code number	Representing the number of the function code, e.g. P00.00
Function code name	Name of the function code, explaining it
Leave-factory value	The value of the function code after restoring the leave-factory settings
Set range	The minimum and maximum values of the function code allowed to set
Unit	V: Voltage; A: Current; ℃: temperature; Ω: resistance; mH: inductance; rpm: rotate speed; %: percentage; bps: baud rate; Hz, kHz: frequency; ms. s, min, h. kh: time; kW: power; ⁄: No unit
Property	○: Means the function code can be changed during running; ×: Means the function code can be changed in the stop state; *: Means the function code can be read only, can not be changed
Function code option	List of function code parameter settings
User setting	Used to set parameters by users

5.1 Basic menu function code parameter table

Function code	Name	LCD display	Setting range	Minimum unit	Default value	Menu mode		Change
						Q	B	
Group P00: System management								
P00.00	Menu mode selection	Menu mode selection	0: Quick menu mode. Only the parameters related to the quick running of the drive will be displayed 1: Full menu mode All the function parameters are displayed 2: Changing the memory menu mode Only the parameters that are different from the leave-factory values are displayed	1	0	√	√	○
P00.01	User password	User password	0: No password Other: Password protection	1	0	×	√	○
P00.02	LCD display language selection	Language selection	0: Chinese 1: English	1	0	×	√	○

P00.03	Parameter protection setting	Parameter protection setting	0: All the data can be changed; 1: Only the main set frequency (digital setting P02.05) and this function code can be changed 2: Only this function code can be changed	1	0	√	√	○
P00.04	Selection of key functions	Selection of key functions	Unit place: Manufacturer commissioning Tens place: Function selection of the STOP/RESET key 0: The STOP key is valid only in the panel control mode 1: The STOP key is valid in all control modes Note: The RESET key is valid in any control mode Hundreds place: Function selection of M key 0: No function 1: JOG 2: FWD/REV 3: Command channel switching 1 (valid only in stop status) 4: Command channel switching 2 (valid both in stop & running status) 5: Panel locking function 6: Emergency stop function 7: Coast to stop function Thousands place: Panel locking function 0: Lock all the keys 1: Lock all the keys except the STOP key 2: Lock all the keys except the >> key 3: Lock all the keys except the RUN & STOP key	1	0100	×	√	×
P00.05	Parameter initialization	Parameter initialization	0: Parameter changing status 1: Clear fault memory information 2: Restore to leave-factory value 3: Restore the quick start function group only	1	0	×	√	×
P00.06	Parameter copy	Parameter copy	0: Disabled 1: Uploading parameter 2: Downloading parameters 3: Downloading parameters (except the motor parameters) Note: The drive parameters will not be uploaded/downloaded	1	0	×	√	×

Group P01: Status display parameters								
P01.00	Main reference frequency channel	Main reference frequency channel	0: Disabled 1: Digital reference 1: Keyboard ∧∨ reference 2: Digital reference 2: Terminal UP/DN reference 3: Serial port communication reference 4: AI analog reference 5: Terminal PULSE reference 6: Internal PLC running 7: Process closed loop PID 8: Multi-speed 9: Bus reference	1	0	×	√	*
P01.01	Main reference set frequency	Main reference set frequency	-3000.00~3000.00Hz	0.01Hz	0.00	×	√	*
P01.02	Auxiliary reference set frequency	Auxiliary reference set frequency	-3000.00~3000.00Hz	0.01Hz	0.00	×	√	*
P01.03	Set frequency	Set frequency	-3000.00~3000.00Hz	0.01Hz	0.00	×	√	*
P01.04	Frequency command (after acceleration / deceleration)	Frequency command	-3000.00~3000.00Hz	0.01Hz	0.00	×	√	*
P01.05	Output frequency	Output frequency	-3000.00~3000.00Hz	0.01Hz	0.00	×	√	*
P01.06	Output voltage	Output voltage	0~480V	1V	0	×	√	*
P01.07	Output current	Output current	0.0~3Ie	0.1A	0.0	×	√	*
P01.08	Torque current	Torque current	-300.0~+300.0%	0.1%	0.0%	×	√	*
P01.09	Flux current	Flux current	0~+100.0%	0.1%	0.0%	×	√	*
P01.10	Output torque	Output torque	-300.0~+300.0%	0.1%	0.0%	×	√	*
P01.11	Motor power	Motor power	0.0%~200.0% (relative to the rated power of the motor)	0.1%	0.0%	×	√	*
P01.12~ P01.13	Reserved							
P01.14	High level of output	Output (kWh)	0~65535*10000kWh	10000kWh	0	×	√	*

	(kWh)							
P01.15	Low level of output (kWh)	Output (kWh)	0~9999kWh	1kWh	0	×	√	*
P01.16	Bus voltage	Bus voltage	0~800V	1V	0	×	√	*
P01.17	Operation state of the drive	Operation state of the drive	0~FFFFH Bit 0: RUN/STOP Bit 1: REV/FWD Bit 2: Running at zero speed Bit 3: Accelerating Bit 4: Decelerating Bit 5: Running at constant speed Bit 6: Pre-exciting Bit 7: Tuning Bit 8: Over-current limiting Bit 9: DC over-voltage limiting bit10~bit11:Reserved Bit 12: Drive in fault bit13~bit15:Reserved	1	0000	×	√	*
P01.18	State of digital input terminal	DI terminal state	0~3FH, 0: off; 1: on The high-speed pulse reference will not be refreshed synchronously	1	00	×	√	*
P01.19	State of digital output terminal	DO terminal state	0~7H, 0: open; 1: close The high-speed pulse output will not be refreshed synchronously	1	0	×	√	*
P01.20	AI1 input voltage	AI1 input voltage	-10.00~10.00V	0.01V	0.00	×	√	*
P01.21	AI2 input voltage	AI2 input voltage	-10.00~10.00V	0.01V	0.00	×	√	*
P01.22	Reserved							
P01.23	AO1 output	AO1 output	0.0~100.0% (percentage relative to the full range)	0.1%	0.0%	×	√	*
P01.24	Reserved							
P01.25	Process closed loop reference	Process closed loop reference	-100.0~100.0% (percentage relative to the full range)	0.1%	0.0%	×	√	*
P01.26	Process closed loop feedback	Process closed loop feedback	-100.0~100.0% (percentage relative to the full range)	0.1%	0.0%	×	√	*
P01.27	Process closed loop error	Process closed loop error	-100.0~100.0% (percentage relative to the full range)	0.1%	0.0%	×	√	*
P01.28	Process closed loop output	Process closed loop output	-100.0~100.0% (percentage relative to the full range)	0.1%	0.0%	×	√	*

P01.29	Estimated temperature of motor	Estimated temperature of motor	0~200℃	1℃	0	×	√	*
P01.30~ P01.31	Reserved							
P01.32	Torque reference	Torque reference	-300.0%~300.0% (relative motor rated torque)	0.1%	0.0%	×	√	*
P01.33~ P01.41	Reserved							
P01.42	Pulse frequency of terminal X6	Pulse frequency of terminal X6	0.0~100.0KHz	0.1	0.0	×	√	*
Group P02: Basic parameters								
P02.00	Reserved							
P02.01	Motor selection	Motor selection	0: Motor 1 1: Motor 2	1	0	×	√	×
P02.02	Running command channel selection	Command channel selection	0: Keyboard control 1: Terminal control 2: Communication control 3: Bus control	1	0	√	√	○
P02.03	Running direction setting	Running direction setting	0: Forward running; 1: Reverse running	1	0	√	√	○
P02.04	Main reference frequency source selection	Main reference source selection	0: Digital reference 1: Keyboard ∧∨ reference 1: Digital reference 2: Terminal UP/DN reference 2: Serial port communication reference 3: AI analog reference 4: Terminal PULSE reference 5: Internal PLC running 6: Process closed loop PID 7: Multi-speed 8: Bus reference	1	0	√	√	○
P02.05	Digital setting of main reference frequency	Main reference frequency setting	P02.17~P02.16	0.01Hz	50.00	√	√	○
P02.06	Main & auxiliary reference digital frequency control	Main & auxiliary reference frequency control	Unit place of LED: Main digital frequency saving control 0: Save when power down 1: Do not save when power down Tens place of LED: Main digital	1	0000	×	√	○

			frequency control when stop 0: Maintained when stop 1: Reset when stop Hundreds place of LED: Auxiliary digital frequency saving control 0: Save when power down 1: Do not save when power down Thousands place of LED: Auxiliary digital frequency control when stop 0: Maintained when stop 1: Reset when stop Note: The unit and tens places are only applicable for P02.04=0, 1, 2 hundreds and thousands place are only applicable for P02.07=1, 2, 3					
P02.07	Auxiliary reference frequency source selection	Auxiliary frequency source selection	0: No auxiliary reference 1: Digital reference 1: Keyboard ∧∨ reference 2: Digital reference 2: Terminal UP/DN reference 3: Serial port communication reference 4: AI analog reference 5: Terminal PULSE reference 6: Process closed loop PID 7: Bus reference	1	0	×	√	○
P02.08	Digital setting of auxiliary reference	Digital auxiliary reference	0.00~3000.0Hz	0.01Hz	0.00	×	√	○
P02.09	Auxiliary reference coefficient	Auxiliary reference coefficient	0.00~9.99 Only enabled for P02.07=4~7	0.01	1.00	×	√	○
P02.10	Calculation of reference frequency source	Main/auxiliary reference calculation	0:+ 1:- 2:* 3: MAX (main reference, auxiliary reference) 4: MIN (main reference, auxiliary reference) 5: sqrt (main reference) + sqrt (auxiliary reference) 6: sqrt (main reference + auxiliary reference) 7: Switching between main and auxiliary reference frequency source 8: Switching between main reference frequency source and (main +	1	0	×	√	○

			auxiliary) reference frequency source 9: Switching between auxiliary reference frequency source and (main + auxiliary) reference frequency source					
P02.11	Proportion adjustment selection of set frequency	Frequency proportion adjustment	0: Disabled 1: Corresponds to P02.15 2: Corresponds to the current frequency	1	0	×	√	○
P02.12	Proportion adjustment coefficient of set frequency	Proportion adjustment coefficient	0.0%~200.0%	0.1%	100.0%	×	√	○
P02.13	Acceleration time 1	Acceleration time 1	0.0~3600.0	(Unit adopts that of P11.01) 0.1	0.75~22:6S 30~45:20S Others: 30S	√	√	○
P02.14	Deceleration time 1	Deceleration time 1	0.0~3600.0	(Unit adopts that of P11.01) 0.1	0.75~22:6S 30~45:20S Others: 30S	√	√	○
P02.15	Maximum output frequency	Maximum output frequency	MAX{50.00, upper limit frequency P02.16}~ 3000.00Hz	0.01Hz	50.00	√	√	×
P02.16	Upper limit frequency	Upper limit frequency	P02.17~P02.15	0.01Hz	50.00	√	√	○
P02.17	Lower limit frequency	Lower limit frequency	0.00~P02.16	0.01Hz	0.00	√	√	○
Group P03: Motor parameters								
P03.00	Rated power of motor 1	Rated power	0.4~999.9KW	0.1	0	√	√	×
P03.01	Rated voltage of motor 1	Rated voltage	0~ rated voltage of drive (P98.04)	1	0	√	√	×
P03.02	Rated current of motor 1	Rated current	0.1~999.9A	0.1A	Depending on model	√	√	×
P03.03	Rated frequency of motor 1	Rated frequency	1.00~3000.0Hz	0.01Hz	Depending on model	√	√	×
P03.04	Rated rotating	Rated rotating	0~60000rpm	1rpm	1440rpm	√	√	×

	speed of motor 1	speed						
P03.05	Power factor of motor 1	Power factor	0.001~1.000 It shall be used when calculating the motor parameters with the nameplates	0.001	Depending on model	√	√	×
P03.06	Stator resistance of motor 1	Stator resistance R1	0.000~65.000	0.001	Depending on model	√	√	×
P03.07	Leakage inductance of motor 1	Leakage inductance of motor 1 X	0.0~650.00	0.01	Depending on model	√	√	×
P03.08	Rotator resistance of motor 1	Rotator resistance of motor 1 R2	0.000~65.000	0.001	Depending on model	√	√	×
P03.09	Mutual inductance of motor 1	Mutual inductance of motor 1 Xm	0.0~650.00	0.01	Depending on model	√	√	×
P03.10	No-load current (I0) of motor 1	No-load current (I0) of motor 1	0.1~999.9A	0.1A	Depending on model	√	√	×
P03.11	Overload protection factor of motor 1	Overload protection factor of motor 1	20.0%~110.0% Set action level (%) = motor rated current/ drive rated current × 100 Low speed compensation actual action level = set action level × (output frequency/ 30HZ × 45 +55) Actual converted current of overload protection = sampling current/overload protection action level	0.1%	Depending on model	√	√	×
P03.12	Rated power of motor 2	Rated power	0.4~999.9KW	0.1KW	Depending on model	√	√	×
P03.13	Rated voltage of motor 2	Rated voltage	0~ rated voltage of drive (P98.04)	1V	Depending on model	√	√	×
P03.14	Rated current of motor 2	Rated current	0.1~999.9A	0.1A	Depending on model	√	√	×
P03.15	Rated frequency of motor 2	Rated frequency	1.00~3000.00Hz	0.01Hz	Depending on model	√	√	×
P03.16	Rated rotating speed of motor 2	Rated rotating speed	0~60000rpm	1rpm	1440rpm	√	√	×
P03.17	Power factor of motor 2	Power factor	0.001~1.000 It shall be used when calculating the motor parameters with the nameplates	0.001	Depending on model	√	√	×

P03.18	Stator resistance of motor 2	Stator resistance R1	0.000~65.000	0.001	Depending on model	√	√	×
P03.19	Leakage inductance of motor 2	Leakage inductance of motor 2 X	0.0~650.00	0.01	Depending on model	√	√	×
P03.20	Rotator resistance of motor 2	Rotator resistance of motor 2 R2	0.000~65.000	0.001	Depending on model	√	√	×
P03.21	Mutual inductance of motor 2	Mutual inductance of motor 2 Xm	0.0~650.00	0.01	Depending on model	√	√	×
P03.22	No-load current (I0) of motor 2	No-load current (I0)	0.1~999.9A	0.1A	Depending on model	√	√	×
P03.23	Overload protection factor of motor 2	Overload protection factor of motor 2	20.0~110.0% Set action level (%) = motor rated current/ drive rated current × 100 Low speed compensation actual action level = set action level × (output frequency/ 30HZ × 45 + +55) Actual converted current of overload protection = sampling current/overload protection action level	0.1%	100.0%	√	√	×
P03.24	Parameter auto-tuning	Parameter auto-tuning	0: Disabled 1: Enabled (motor in static status) 2: Enabled (motor in rotate status) 3: Reserved (according to the nameplate setting)	1	0	√	√	×
P03.25~ P03.28	Reserved							
Group P07: VF control parameters								
P07.00	Motor 1 V/F curve setting	Motor 1 V/F curve setting	0: User-customized V/F curve 1~16:Reserved 17: 2 times power curve 18: 1.7 times power curve 19: 1.2 times power curve	1	0	×	√	×
P07.01	Motor 1 V/F frequency 3	Motor 1 V/F frequency 3	P07.03~P03.03	0.01Hz	0.00Hz	×	√	×
P07.02	Motor 1 V/F voltage 3	Motor 1 V/F voltage 3	P07.04~100.0%	0.1%	0.0%	×	√	×
P07.03	Motor 1 V/F frequency 2	Motor 1 V/F frequency 2	P07.05 ~P07.01	0.01Hz	0.00Hz	×	√	×
P07.04	Motor 1 V/F voltage 2	Motor 1 V/F voltage 2	P07.06~P07.02	0.1%	0.0%	×	√	×
P07.05	Motor 1 V/F	Motor 1 V/F	0.00~P07.03	0.01Hz	0.00Hz	×	√	×

	frequency 1	frequency 1						
P07.06	Motor 1 V/F voltage 1	Motor 1 V/F voltage 1	0~P07.04	0.1%	0.0%	×	√	×
P07.07	Motor 1 torque increase	Motor 1 torque increase	0.0%~30.0%	0.1%	0.0%	×	√	○
P07.08	Motor 1 torque increase cut-off point	Motor 1 torque increase cut-off point	0.0%~50.0% (corresponds to P03.03)	0.1%	10.0%	×	√	○
P07.09	Motor 2 V/F curve setting	Motor 2 V/F curve setting	0: User-customized V/F curve 1~16:Reserved 17: 2 times power curve 18: 1.7 times power curve 19: 1.2 times power curve	1	0	×	√	×
P07.10	Motor 2 V/F frequency 3	Motor 2 V/F frequency 3	P07.12~P03.15	0.01Hz	0.00Hz	×	√	×
P07.11	Motor 2 V/F voltage 3	Motor 2 V/F voltage 3	P07.13~100.0%	0.1%	0.0%	×	√	×
P07.12	Motor 2 V/F frequency 2	Motor 2 V/F frequency 2	P07.14 ~P07.10	0.01Hz	0.00Hz	×	√	×
P07.13	Motor 2 V/F voltage 2	Motor 2 V/F voltage 2	P07.15~P07.11	0.1%	0.0%	×	√	×
P07.14	Motor 2 V/F frequency 1	Motor 2 V/F frequency 1	0.00~P07.12	0.01Hz	0.00Hz	×	√	×
P07.15	Motor 2 V/F voltage 1	Motor 2 V/F voltage 1	0~P07.13	0.1%	0.0%	×	√	×
P07.16	Motor 2 torque increase	Motor 2 torque increase	0.0%~30.0%	0.1%	0.0%	×	√	○
P07.17	Motor 2 torque increase cut-off point	Motor 2 torque increase cut-off point	0.0%~50.0% (corresponds to P03.15)	0.1%	10.0%	×	√	○
P07.18	Motor stable factor	Motor stable factor	0~255	1	10	×	√	○
P07.19	AVR function	AVR function	0: Disabled 1: Always enabled 2: Disabled only in deceleration situation	1	2	×	√	×
P07.20	Drooping control value	Drooping control value	0~30.00Hz	0.01	0.00	×	√	○
Group P08: Start and stop control parameters								
P08.00	Startup mode	Start mode	0: Start from the startup frequency 1:Start from the startup frequency after	1	0	×	√	×

			braking 2:Start after speed tracking (including the judgment of direction)					
P08.01	Startup delay time	Startup delay time	0.00~30.00s	0.01s	0.00s	×	√	○
P08.02	Startup (dwell) frequency	Startup frequency	0.00~60.00Hz	0.01Hz	0.00Hz	×	√	○
P08.03	Startup frequency retention time	Startup frequency retention time	0.00~10.00s	0.01s	0.00s	×	√	○
P08.04	Startup DC braking current	Startup DC braking current	G: 0.0% ~ 100.0% of the rated current of the drive P: 0.0% ~ 50.0% of the rated current of the drive	0.1%	0.0%	×	√	○
P08.05	Startup DC braking time	Startup DC braking time	0.00 (Disabled) 0.01~30.00s	0.01s	0.00s	×	√	○
P08.06	Stop mode	Stop mode	0: Decelerate to stop 1: Coast to stop 2:Decelerate to stop + DC braking	1	0	×	√	×
P08.07	Stop frequency detection	Stop frequency detection	0.00~150.00Hz	0.01Hz	0.50Hz	×	√	×
P08.08	Stop frequency detection retention time	Stop frequency detection retention time	0.00~10.00s	0.01s	0.00s	×	√	○
P08.09~ P08.11	Reserved							
P08.12	Initial frequency for stop DC braking	Initial frequency for stop braking	0.00~60.00Hz	0.01Hz	0.00Hz	×	√	○
P08.13	Waiting time for stop DC braking	Waiting time for stop braking	0.00~10.00s	0.01s	0.00s	×	√	○
P08.14	Stop DC braking current	Stop DC braking current	G: 0.0% ~ 100.0% of the rated current of the drive P: 0.0% ~ 50.0% of the rated current of the drive	0.1%	0.0%	×	√	○
P08.15	Stop DC braking time	Stop DC braking time	0.0 (Disabled) 0.01~30.00s	0.01s	0.00s	×	√	○
P08.16	Selecting restart	Restart upon power fault	0: Disabled 1: Enabled	1	0	×	√	×

	function upon power fault							
P08.17	Waiting time for restart upon power fault	Restart waiting time	0.0~3600.0s	0.1s	0.0s	×	√	○
P08.18	Anti-reverse selection	Anti-reverse selection	0: Reverse operation is allowed 1: Reverse operation is prohibited (run at zero frequency upon reverse running command)	1	0	×	√	×
P08.19	FWD/REV dead- time	FWD/REV dead- time	0.00~360.00s	0.01s	0.00s	×	√	○
P08.20	FWD/REV switching mode	FWD/REV switching mode	0: Switch once over the zero frequency 1: Switch once over the startup frequency	1	0	×	√	×
P08.21	Use ratio of dynamic braking	Use ratio of braking	0.0~100.0% (0: Disabled)	0.1%	00.0%	×	√	○
P08.22	Braking startup voltage	Braking startup voltage	700~780	1	750	×	√	○
P08.23	Deceleratio n time for emergency stop	Deceleration time for emergency stop	0.00~100.00s (0: Automatic high-speed deceleration)	0.01s	0.00s	×	√	○
Group P09: Digital input/output parameters								
P09.00~ P09.05	Function selection of input terminals X1~X6	X1 ~ X6 Terminal functions	0: No function 1: Forward running (FWD) 2: Reverse running (REV) 3: External jog forward running control input 4: External jog reverse running control input 5: Three-wire operation control 6: Multi-stage reference terminal 1 7: Multi-stage reference terminal 2 8: Multi-stage reference terminal 3 9: Multi-stage reference terminal 4 10: Acceleration/deceleration time terminal 1 11: Acceleration/deceleration time terminal 2 12: Main reference frequency pulse input (valid only for X6) 13: Auxiliary reference frequency pulse input (valid only for X6) 14: Frequency increase command	1	1 2 0 0 0 0	√	√	×

			(UP) 15: Frequency decrease command (DN) 16: External fault normally open input 17: External fault normally closed input 18: External interrupt normally open contact input 19: External interrupt normally closed contact input 20: Reference frequency source switching command 21: Reserved 22: External reset (RESET) input 23: Coast to stop input (FRS) 24: Acceleration/deceleration disable command 25: Stop DC braking input command 26: Simple PLC pause command 27: Reserved 28: Clearing the PLC stop memory 29: PID disabled 30: PID closed loop soft-start disabled 31: PID integral retention 32: PID integral clearing 33: Switching PID adjustment 34: Main reference frequency source selection 1 35: Main reference frequency source selection 2 36: Main reference frequency source selection 3 37: Switching main reference frequency to AI 38: Command source selection 1 39: Command source selection 2 40: Switching command to terminal 41: FWD disabled 42: REV disabled 43: Drive running disabled 44: External stop command (it is valid for all the control modes, the device will be stopped in accordance with the current stop mode) 45: Auxiliary reference frequency reset 46: Pre-magnetizing command terminal (reserved) 47~54:Reserved					

			55: Motor 1 and 2 switching terminal 56: Security terminal input 57~59: Reserved 60: Emergency stop 64~73: Reserved 74: PID reference frequency pulse input (valid only for X6) 75: PID feedback frequency pulse input (valid only for X6) 76~95: Reserved Only the following function No. will be shown in the quick menu: 0, 1~4, 6~11, 14, 15, 22~27, 29, 33~35, 37~44.					
P09.06~ P09.07	Reserved							
P09.08	FWD/REV running mode setting	Running control mode	0: Two-wire control mode 1 1: Two-wire control mode 2 2: Three-wire running control 1 – self-keeping function (add any one terminal among X1~X6) 3: Three-wire running control 2 – self-keeping function (add any one terminal among X1~X6)	1	0	×	√	×
P09.09	Terminal UP/DN acceleration /deceleration rate	Terminal UP/DN acceleration/ deceleration rate	0.01~99.99Hz/s	0.01	1.00	×	√	○
P09.10	Terminal filtering time	Terminal filtering time	0~500ms	1	10	×	√	○
P09.11	Maximum input pulse frequency of X6	Maximum input pulse of X6	0.1~100.0 kHz	0.1kHz	10.0	×	√	○
P09.12	Reserved							
P09.13	Pulse reference central point selection	Pulse reference central point	Unit place: X6 central point selection 0: Without central point 1: With central point, it is (P09.11)/2. It is positive when the frequency is less than the central point frequency 2: With central point, it is (P09.11)/2. It is positive when the frequency is larger than the central point frequency	1	0	×	√	○
P09.14	Pulse input	Pulse input	0.00~10.00s	0.01s	0.05	×	√	○

	filtering time	filtering time						
P09.15	Input terminal enabled status setting	Input terminal enabled status	Binary setting: 0: Normal logical, enabled upon connection 1: Inverted logical, enabled upon disconnection Unit place of LED: BIT0~BIT3: X1~X4 Tens place of LED: BIT0~BIT1: X5~X6	1	00	×	√	○
P09.16	Virtual input terminal setting	Virtual input terminal setting	Binary setting: 0: Disabled 1: Enabled Unit place of LED: BIT0~BIT3: X1~X4 Tens place of LED: BIT0~BIT1: X5~X6	1	00	×	√	○
P09.17	Output selection of Multi-functional output terminal Y1	Output selection of Multi-functional output terminal Y1	0: Open collector output terminal Y1 1: DO terminal output	1	0	√	√	×
P09.18	Open collector output terminal Y1	Y1 function selection	0: Drive in running state signal (RUN) 1: Frequency arrival signal (FAR) 2: Speed non-zero detection signal 3: Frequency level detection signal (FDT1) 4: Frequency level detection signal (FDT2) 5: Overload detection signal (OL) 6: Lockout for under-voltage (LU) 7: External fault stop (EXT) 8: Frequency upper limit (FHL)	1	0	√	√	×
P09.19	Open collector output terminal Y2	Y2 function selection		1	1	√	√	×

P09.20	Relay RO1 output function selection	RO1 function selection	9: Frequency lower limit (FLL) 10: Drive running at zero-speed 11: Simple PLC stage running completion indication 12: PLC cycle completion indication 13~14:Reserved 15: Drive ready for running (RDY) 16: Drive fault 17: Host device switch signal 18~33: Reserved 34: Drive FWD/REV indication terminal 35: Motor 1 and 2 indication terminal 36: Bus card ON/OFF signal 37~42: Reserved 43: PID feedback loss 44: PID feedback exceeding limit Only the following function No. will be shown in the shortcut menu: 0, 1, 3, 4, 5, 6, 7, 8, 9, 15, 16	1	15	√	√	×
P09.21	Reserved							
P09.22	Output terminal enabled status setting	Output terminal enabled status	Binary setting: 0: Enabled upon connection 1: Enabled upon disconnection Unit place of LED: BIT0~BIT2:Y1、Y2、RO1	1	0	×	√	○
P09.23	Relay RO1 output delay	RO1 output delay	0.1~10.0s	0.1s	0.1s	×	√	○
P09.24	Frequency arrival (FAR) detection width	Frequency arrival detection width	0.00~3000.00Hz	0.01Hz	2.50Hz	×	√	○
P09.25	FDT 1 level upper limit	FDT 1 level upper limit	P09.26~ P02.16	0.01Hz	50.00Hz	×	√	○
P09.26	FDT 1 level lower limit	FDT 1 level lower limit	0.00~ P09.25	0.01Hz	49.00Hz	×	√	○
P09.27	FDT 2 level upper limit	FDT 2 level upper limit	P09.28~ P02.16	0.01Hz	25.00Hz	×	√	○
P09.28	FDT 2 level lower limit	FDT 2 level lower limit	0.00~ P09.27	0.01Hz	24.00Hz	×	√	○
P09.29	DO terminal output	Digital output	0: No function 1: Output frequency 2: Set frequency (0~Maximum output frequency) 3: Output current I_{ei} (0~2 * I_{ei})	1	0	√	√	○

			4: Output current I_{em} (0~2 * I_{em}) 5: Output torque (0~3 * T_{em}) 6: Output torque current (0~3*I_{tem}) 7: Motor rotating speed (0~Maximum output frequency) 8: Output voltage (0~1.5 * V_e) 9: AI1（-10~10V/4~20mA） 10: AI2（-10~10V/4~20mA） 11: Reserved 12: Output power (0~2*P_e) 13~16: Reserved 17: Percentage of host device (0~65535) 18: Reserved 19: Percentage of bus card Only the following function No. will be shown in shortcut menu: 0~8					
P09.30	Maximum output pulse frequency	Maximum output pulse	0.1~50.0 (Maximum 50.0k)	0.1kHz	10.0	√	√	○
P09.31	Pulse output central point selection	Pulse output central point	0: Without central point 1: With central point It is (P09.30)/2. It is positive when the frequency is less than the central point frequency 2: With central point It is (P09.30)/2. It is positive when the frequency is larger than the central point frequency	1	0	×	√	○
P09.32	Pulse output filtering time	Pulse output filtering time	0.00~10.00s	0.01s	0.05	×	√	○
P09.33	Flux detection value	Flux detection value	10.0%~100.0%	0.1%	100.0%	×	√	○
P09.34	Zero-speed threshold	Zero-speed threshold	0.0~100.0% of maximum frequency	1.0%	1.0%	×	√	○
Group P10: Analog input/output terminal parameters								
P10.00	Analog input properties	Analog input properties	Unit place: AI1 0: Voltage input 1: Current input Tens place: AI2 0: Voltage input 1: Current input	1	00	√	√	×
P10.01	Analog AI	AI function	Unit place of LED: AI1 function	1	000	√	√	×

	function selection	selection	selection 0: No function 1: Main reference frequency setting 2: Auxiliary reference frequency setting 3~8: Reserved 9: Main reference frequency setting (unipolar) A: Auxiliary reference frequency setting (unipolar) B: Motor temperature detection C: Output voltage offset (under V/F) D: Output voltage (under V/F) E: Reserved (command rate numerator) Tens place of LED: AI2 function selection is the same as above					
P10.02	AI1 filtering	AI1 filtering	0.000~10.000s	0.001s	0.010s	×	√	○
P10.03	AI2 filtering	AI2 filtering	0.000~10.000s	0.001s	0.010s	×	√	○
P10.04	Reserved							
P10.05	Analog curve selection	Analog curve selection	Unit place of LED: AI1 curve selection 0: Line 1 1: Line 2 2: Curve 1 Tens place of LED: AI2 curve selection The same as above Hundreds place of LED: Reserved Thousands place of LED: Pulse input curve selection The same as above	1	0010H	√	√	○
P10.06	Maximum reference of line 1	Maximum reference 1	P10.08~100.0%	0.1%	100.0%	√	√	○
P10.07	Actual value corresponds to the maximum reference of line 1	Actual value corresponds to maximum reference 1	Frequency reference: 0.0~100.0% of Fmax Magnetic flux: 0.0~100.0%Φe	0.1%	100.0%	√	√	○
P10.08	Minimum reference of line 1	Minimum reference 1	0.0%~P10.06	0.1%	0.0%	√	√	○
P10.09	Actual value corresponds to the minimum reference of	Actual value corresponds to minimum reference 1	The same as P10.07	0.1%	0.0%	√	√	○

	line 1							
P10.10	Maximum reference of line 2	Maximum reference 2	P10.12~100.0%	0.1%	100.0%	√	√	○
P10.11	Actual value corresponds to the maximum reference of line 2	Actual value corresponds to maximum reference 2	The same as P10.07	0.1%	100.0%	√	√	○
P10.12	Minimum reference of line 2	Minimum reference 2	0.0%~P10.10	0.1%	0.0%	√	√	○
P10.13	Actual value corresponds to the minimum reference of line 2	Actual value corresponds to minimum reference 2	The same as P10.07	0.1%	0.0%	√	√	○
P10.14	Maximum reference of curve 1	Maximum reference 1	P10.16~100.0%	0.1%	100.0%	√	√	○
P10.15	Actual value corresponds to the maximum reference of curve 1	Actual value corresponds to maximum reference 1	Frequency reference: 0.0~100.0% of Pmax Magnetic flux: 0.0~100.0% of Φe	0.1%	100.0%	√	√	○
P10.16	Inflection point 2 of the curve 1 reference	Inflection point 2 of the curve 1 reference	P10.18~P10.14	0.1%	100.0%	×	√	○
P10.17	Actual value corresponds to the inflection point 2 of the curve 1	Actual value of inflection point 2	The same as P10.15	0.1%	100.0%	×	√	○
P10.18	Inflection point 1 of the curve 1 reference	Inflection point 1 of the curve 1 reference	P10.20~P10.16	0.1%	0.0%	×	√	○
P10.19	Actual value corresponds to the inflection	Actual value of inflection point 1	The same as P10.15	0.1%	0.0%	×	√	○

	point 1 of the curve 1							
P10.20	Minimum reference of curve 1	Minimum reference 1	0.0%~P10.18	0.1%	0.0%	√	√	○
P10.21	Actual value corresponds to the minimum reference of curve 1	Actual value corresponds to minimum reference 1	The same as P10.15	0.1%	0.0%	√	√	○
P10.22	Types of analog output	Types of analog output	Unit place of LED: AO1 selection 0: 0~10V(0~20mA) 1: 2~10V(4~20mA) The current and voltage depend on the hardware	1	0	√	√	○
P10.23	Analog output terminal AO1 functions	AO1 functions	0: Output frequency (0~ maximum frequency) 1: Set frequency (0~ maximum frequency) 2: Set frequency (after acceleration/deceleration) (0~ maximum frequency) 3: Reserved 4: Output current (0~2*Ie) 5: Output current (0~2*Iem) 6: Output torque (0~3 * Tem) 7: Output torque current (0~3*Item) 8: Output voltage (0~1.2*Ve) 9: Bus voltage (0~800V) 10: AI1 after adjustment 11: AI2 after adjustment 12: Reserved 13: Output power (0~2*Pe) 14: Percentage of host device (0~4095) 15~23: Reserved 24: Motor rotating speed (bipolar, output frequency during V/F – slip compensation) 25: Reserved (output the motor temperature measured with constant current source) 26: Percentage of bus card (0~4095) Only the following function No. will be shown in shortcut menu: 0~9	1	00	√	√	○
P10.24	AO1 gain	AO1 gain	0.0%~200.0%	0.1%	100.0%	×	√	○

P10.25	AO1 zero offset correction	AO1 zero offset correction	-100.0%~100.0%	0.1%	0.0%	×	√	○
P10.26~ P10.28	Reserved							
P10.29	AI1 zero offset correction	AI1 zero offset correction	-1.00~1.00V	0.01V	0.00V	×	√	○
P10.30	AI2 zero offset correction	AI2 zero offset correction	-1.00~1.00V	0.01V	0.00V	×	√	○
P10.31	Reserved							
Group P11: Auxiliary function parameters								
P11.00	Acceleration/ deceleration mode selection	Acceleration/ deceleration mode selection	0: Linear acceleration/deceleration 1: S curve acceleration/deceleration	1	0	×	√	×
P11.01	Unit of acceleration/deceleration time	Unit of acceleration/ deceleration time	0: 0.1s 1: s 2: min	1	1	√	√	○
P11.02	Acceleration time 2	Acceleration time 2	0.0~3600.0	(Unit adopts that of P11.01) 0.1	6.0	×	√	○
P11.03	Deceleration time 2	Deceleration time 2	0.0~3600.0	(Unit adopts that of P11.01) 0.1	6.0	×	√	○
P11.04	Acceleration time 3	Acceleration time 3	0.0~3600.0	(Unit adopts that of P11.01) 0.1	6.0	×	√	○
P11.05	Deceleration time 3	Deceleration time 3	0.0~3600.0	(Unit adopts that of P11.01) 0.1	6.0	×	√	○
P11.06	Acceleration time 4	Acceleration time 4	0.0~3600.0	(Unit adopts that of P11.01) 0.1	6.0	×	√	○
P11.07	Deceleration time 4	Deceleration time 4	0.0~3600.0	(Unit adopts	6.0	×	√	○

				that of P11.01) 0.1				
P11.08	S curve acceleration	Acceleration	10.00~600.00 Hz/s	0.01	25.00	×	√	○
P11.09	Fast acceleration at start segment of S curve	Fast acceleration at start segment	0.20~600.00Hz/s^2	0.01	12.50	×	√	○
P11.10	Fast acceleration at end segment of S curve	Fast acceleration at end segment	0.20~600.00Hz/s^2	0.01	20.00	×	√	○
P11.11	S curve deceleration	Deceleration	10.00~600.00Hz/s	0.01	25.00	×	√	○
P11.12	Fast deceleration at start segment of S curve	Fast deceleration at start segment	0.20~600.00Hz/s^2	0.01	20.00	×	√	○
P11.13	Fast deceleration at end segment of S curve	Fast deceleration at end segment	0.20~600.00 Hz/s^2	0.01	12.50	×	√	○
P11.14	Switching frequency of acceleration/ deceleration time 1 and 2	Switching frequency of acceleration/ deceleration	0.00~3000.00Hz	0.01Hz	0.00	×	√	○
P11.15	Switching hysteresis loop frequency of acceleration/ deceleration time 1 and 2	Switching hysteresis loop frequency of acceleration/ deceleration	0.00~655.35Hz	0.01Hz	1.00	×	√	○
P11.16	Jog acceleration /deceleratio	Jog acceleration /deceleration time	0.1~60.0s	0.1s	6.0	×	√	○

	n time							
P11.17	Jog interval	Jog interval	0.0~100.0s	0.1s	0.0	×	√	○
P11.18	Frequency of jog running	Frequency of jog running	0.10~50.00Hz	0.01Hz	5.00	√	√	○
P11.19	Upper limit of skip frequency 1	Skip frequency 1	P11.20~3000.00Hz	0.01Hz	0.00	×	√	×
P11.20	Lower limit of skip frequency 1	Skip frequency 1	0.00~ P11.19	0.01Hz	0.00	×	√	×
P11.21	Upper limit of skip frequency 2	Skip frequency 2	P11.22~3000.00Hz	0.01Hz	0.00	×	√	×
P11.22	Lower limit of skip frequency 2	Skip frequency 2	0.00~ P11.21	0.01Hz	0.00	×	√	×
P11.23	Upper limit of skip frequency 3	Skip frequency 3	P11.24~3000.00Hz	0.01Hz	0.00	×	√	×
P11.24	Lower limit of skip frequency 3	Skip frequency 3	0.00~ P11.23	0.01Hz	0.00	×	√	×
Group P12: Advanced function parameters								
P12.00	Reserved							
P12.01	Energy-saving running	Energy-saving running	0: Disabled 1: Enabled	1	0	×	√	×
P12.02	Carrier wave frequency	Carrier wave frequency	0.7~16.0kHz	0.1	4.0	√	√	○
P12.03	PWM mode optimization	PWM mode optimization	Unit place: Enable the over modulation 0: Disabled 1: Enabled Tens place: Automatic adjustment selection for carrier wave frequency 0: No automatic adjustment 1: Automatic adjustment Hundreds place: Modulation mode 0: Two-phase/ three-phase switching 1: Three-phase modulation Thousands place: Low frequency carrier limit 0: Disable 1: Enable	1	1001	×	√	×
P12.04	Current loop gain selection	Current loop gain selection	0: Manual selection 1: Calculate automatically (after tuning)	1	0	×	√	×

P12.05	Current loop proportional gain ACR-P	Current loop proportional gain	1~5000	1	1000	×	√	○
P12.06	Current loop integral time ACR-I	Current loop integral time	0.5~100.0ms	0.1	8.0	×	√	○
P12.07	Anti-trip function enabling	Anti-trip function enabling	0: Disable 1: Enable	1	0	×	√	×
P12.08	Frequency reduction rate upon voltage compensation	Frequency reduction rate	0.00~99.99Hz/s	0.01	10.00	×	√	○
P12.09	Pre-magnetizing time	Pre-magnetizing time	0.0~10.0s	0.1	0.0	×	√	×
P12.10	Minimum flux reference value	Minimum flux reference value	10%~150%	1%	10%	×	√	○
P12.11	Flux-weakening adjustment coefficient 1	Flux-weakening adjustment coefficient 1	0~10000	1	1000	×	√	○
P12.12	Flux-weakening adjustment coefficient 2	Flux-weakening adjustment coefficient 2	0~10000	1	1000	×	√	○
P12.13	Flux-weakening control mode	Flux-weakening control mode	0: Disable 1: Enable	1	1	×	√	○
P12.14	Cooling fan control	Fan control	0: Operate automatically 1: Fan operates continually during power-up 2: Fan operates based on command Note: It will keep running for 3 minutes after power-off	1	2	×	√	×
P12.15 ~P12.27	Reserved	Reserved						
Group P13: Multi-stage reference and simple PLC parameters								
P13.00	Multi-stage reference property setting	Multi-stage reference property	0: Multi-stage frequency reference 1: Multi-stage closed loop reference	1	0	×	√	○
P13.01	Multi-stage reference 1	Multi-stage reference 1	When it is multi-stage frequency:	0.1%	10.0%	×	√	○

P13.02	Multi-stage reference 2	Multi-stage reference 2	0.0%~100.0% corresponds to "minimum frequency ~ maximum frequency" When it is multi-stage closed loop reference: -100.0%~100.0% corresponds to "-10V~+10V"	0.1%	20.0%	×	√	○
P13.03	Multi-stage reference 3	Multi-stage reference 3		0.1%	40.0%	×	√	○
P13.04	Multi-stage reference 4	Multi-stage reference 4		0.1%	60.0%	×	√	○
P13.05	Multi-stage reference 5	Multi-stage reference 5		0.1%	80.0%	×	√	○
P13.06	Multi-stage reference 6	Multi-stage reference 6		0.1%	90.0%	×	√	○
P13.07	Multi-stage reference 7	Multi-stage reference 7		0.1%	100.0%	×	√	○
P13.08	Multi-stage reference 8	Multi-stage reference 8		0.1%	10.0%	×	√	○
P13.09	Multi-stage reference 9	Multi-stage reference 9		0.1%	20.0%	×	√	○
P13.10	Multi-stage reference 10	Multi-stage reference 10		0.1%	40.0%	×	√	○
P13.11	Multi-stage reference 11	Multi-stage reference 11		0.1%	60.0%	×	√	○
P13.12	Multi-stage reference 12	Multi-stage reference 12		0.1%	80.0%	×	√	○
P13.13	Multi-stage reference 13	Multi-stage reference 13		0.1%	90.0%	×	√	○
P13.14	Multi-stage reference 14	Multi-stage reference 14		0.1%	100.0%	×	√	○
P13.15	Multi-stage reference 15	Multi-stage reference 15		0.1%	100.0%	×	√	○
P13.16	Simple PLC running mode selection	PLC running mode	Unit place of LED: PLC running mode 0: Stop after single cycle 1: Hold the end value after single cycle 2: Continuous cycle Tens place of LED: Start mode 0: Restart from the first section 1: Continue to run from the stage of the stop (or fault) moment 2: Continue to run from the stage and frequency of the stop (or fault) moment Hundreds place of LED: power down storage 0: No storage 1: Save the stage and frequency at the	1	0000	×	√	×

			moment of power down Thousands place of LED: Stage time unit selection 0: s 1: min					
P13.17	Stage 1 setting	Stage 1 setting	Unit place of LED: 0: Multi-stage reference (multi-speed or multi-stage closed loop reference depends on P13.00) 1: Digital reference 1: Keyboard ∧∨ reference 2: Digital reference 2: Terminal UP/DN reference 3: Reserved 4: AI analog reference 5: Terminal PULSE reference 6: Process closed loop PID 7: Reserved Tens place of LED: 0: FWD 1: REV 2: Determined by the running command Hundreds place of LED: 0: Acceleration/deceleration time 1 1: Acceleration/deceleration time 2 2: Acceleration/deceleration time 3 3: Acceleration/deceleration time 4	1	000	×	√	×
P13.18	Stage 1 running time	Stage 1 running time	0.0~6500.0	0.1	20.0	×	√	○
P13.19	Stage 2 setting	Stage 2 setting	The same as stage setting 1	1	000	×	√	×
P13.20	Stage 2 running time	Stage 2 running time	0.0~6500.0	0.1	20.0	×	√	○
P13.21	Stage 3 setting	Stage 3 setting	The same as stage setting 1	1	000	×	√	×
P13.22	Stage 3 running time	Stage 3 running time	0.0~6500.0	0.1	20.0	×	√	○
P13.23	Stage 4 setting	Stage 4 setting	The same as stage setting 1	1	000	×	√	×
P13.24	Stage 4 running time	Stage 4 running time	0.0~6500.0	0.1	20.0	×	√	○
P13.25	Stage 5	Stage 5	The same as stage setting 1	1	000	×	√	×

	setting	setting						
P13.26	Stage 5 running time	Stage 5 running time	0.0~6500.0	0.1	20.0	×	√	○
P13.27	Stage 6 setting	Stage 6 setting	The same as stage setting 1	1	000	×	√	×
P13.28	Stage 6 running time	Stage 6 running time	0.0~6500.0	0.1	20.0	×	√	○
P13.29	Stage 7 setting	Stage 7 setting	The same as stage setting 1	1	000	×	√	×
P13.30	Stage 7 running time	Stage 7 running time	0.0~6500.0	0.1	20.0	×	√	○
P13.31	Stage 8 setting	Stage 8 setting	The same as stage setting 1	1	000	×	√	×
P13.32	Stage 8 running time	Stage 8 running time	0.0~6500.0	0.1	20.0	×	√	○
P13.33	Stage 9 setting	Stage 9 setting	The same as stage setting 1	1	000	×	√	×
P13.34	Stage 9 running time	Stage 9 running time	0.0~6500.0	0.1	20.0	×	√	○
P13.35	Stage 10 setting	Stage 10 setting	The same as stage setting 1	1	000	×	√	×
P13.36	Stage 10 running time	Stage 10 running time	0.0~6500.0	0.1	20.0	×	√	○
P13.37	Stage 11 setting	Stage 11 setting	The same as stage setting 1	1	000	×	√	×
P13.38	Stage 11 running time	Stage 11 running time	0.0~6500.0	0.1	20.0	×	√	○
P13.39	Stage 12 setting	Stage 12 setting	The same as stage setting 1	1	000	×	√	×
P13.40	Stage 12 running time	Stage 12 running time	0.0~6500.0	0.1	20.0	×	√	○
P13.41	Stage 13 setting	Stage 13 setting	The same as stage setting 1	1	000	×	√	×
P13.42	Stage 13 running time	Stage 13 running time	0.0~6500.0	0.1	20.0	×	√	○
P13.43	Stage 14 setting	Stage 14 setting	The same as stage setting 1	1	000	×	√	×
P13.44	Stage 14 running	Stage 14 running time	0.0~6500.0	0.1	20.0	×	√	○

	time							
P13.45	Stage 15 setting	Stage 15 setting	The same as stage setting 1	1	000	×	√	×
P13.46	Stage 15 running time	Stage 15 running time	0.0~6500.0	0.1	20.0	×	√	○
Group P14: Process PID parameters								
P14.00	PID Reference channel selection	PID Reference channel selection	0: P14.02 digital reference 1: AI1 2: AI2 3: Reserved 4: Terminal PULSE reference 5: Serial port communication reference	1	0	×	√	○
P14.01	PID feedback channel selection	PID feedback channel selection	0:AI1 1:AI2 2: Reserved 3: Terminal PULSE 4:AI1+AI2 5:AI1-AI2 6:MIN（AI1,AI2） 7:MAX（AI1,AI2）	1	0	×	√	○
P14.02	PID digital reference	PID digital reference	-100.0%~100.0%	0.1	0.0	×	√	○
P14.03	PID command acceleration /deceleratio n time	PID command acceleration/ deceleration time	0~3600.0s	0.1s	0.0s	×	√	○
P14.04	PID adjustment feature selection	PID adjustment feature selection	0: Positive interaction 1: Reverse interaction	1	0	×	√	×
P14.05	Proportional gain KP	Proportional gain KP	0.000~10.000	0.001	0.500	×	√	○
P14.06	Integral gain Ki	Integral gain Ki	0.000~10.000	0.001	0.008	×	√	○
P14.07	Differential gain Kd	Differential gain Kd	0.000~10.000	0.001	0.000	×	√	○
P14.08	Integral separation threshold	Integral separation threshold	0.0~100.0%	0.1%	30.0%	×	√	○
P14.09	Integral amplitude limit	Integral amplitude limit	0.0~100.0%	0.1%	100.0%	×	√	○
P14.10	Differential control selection	Differential control selection	0: Apply differential control to deviation 1: Apply differential control to feedback	1	0	×	√	×

			value					
P14.11	Differential amplitude limit	Differential amplitude limit	0.0~100.0%	0.1%	10.0%	×	√	○
P14.12	Sampling cycle	Sampling cycle	0.001~50.000s	0.001s	0.010s	×	√	○
P14.13	Deviation limit	Deviation limit	0.0~20.0% (Corresponds to PID reference)	0.1%	2.0%	×	√	○
P14.14	PID upper limit channel	PID upper limit channel	0: P14.16 digital reference; 1:AI1 2:AI2	1	0	×	√	○
P14.15	PID lower limit channel	PID lower limit channel	0: P14.17 digital reference; 1:AI1 2:AI2	1	0	×	√	○
P14.16	PID upper limit digital setting	PID upper limit digital setting	P14.17~100.0%	0.1%	100.0%	×	√	○
P14.17	PID lower limit digital setting	PID lower limit digital setting	0.0%~ P14.16	0.1%	0.0%	×	√	○
P14.18	Output filtering time	Output filtering time	0.000~10.000s	0.001s	0.010s	×	√	○
P14.19	PID output feature selection	PID output feature selection	0: PID output is positive 1: PID output is negative	1	0	×	√	×
P14.20	PID offset value	PID offset value	-100.0~100.0%	0.1%	0.0%	×	√	○
P14.21	PID output gain	PID output gain	0.0~250.0	0.1	1.0	×	√	○
P14.22	REV selection of PID output	REV selection of PID output	0: When the PID output is a negative value, there is no limit 1: When the PID output is a negative value, the output is negative	1	1	×	√	×
P14.23	PID pre-set frequency	PID pre-set frequency	0.00~3000.00Hz	0.01Hz	0.00Hz	×	√	○
P14.24	PID pre-set frequency retention time	PID pre-set frequency retention time	0.0~3600.0s	0.1s	0.0s	×	√	×
P14.25	PID fault detection selection	PID fault detection selection	Unit place: PID feedbacks the fault detection selection 0: Continue to run, no alarm 1: Continue to run and display “AL.FbL” (feedback lost) or “AL.Fbo” (feedback exceeding limit) 2: Coast to stop and display “Er.FbL”	1	00	×	√	×

			(feedback lost) or “Er.Fbo” (feedback exceeding limit) Tens place: PID limit setting error processing selection 0: Continue to run, no alarm 1: Continue to run and display “AL.PIL” 2: Coast to stop and display “Er.PIL”					
P14.26	PID feedback lost detection value	PID feedback lost detection value	0.0~100.0%	0.1%	0.0%	×	√	○
P14.27	PID feedback lost detection time	PID feedback lost detection time	0.0s~25.0s	0.1s	1.0s	×	√	○
P14.28	PID feedback exceeding limit detection value	PID feedback exceeding limit detection value	0.0~100.0%	0.1%	100.0%	×	√	○
P14.29	PID feedback exceeding limit detection time	PID feedback exceeding limit detection time	0.0s~25.0s	0.1s	1.0s	×	√	○
Group P15: Communication parameters								
P15.00	Protocol selection	Protocol selection	0: MODBUS 1: Reserved	1	0	×	√	×
P15.01	Communication configuration	Communication configuration	Unit place of LED: Baud rate selection 0: 4800BPS 1: 9600BPS 2: 19200BPS 3: 38400BPS 4: 115200BPS 5: 125000BPS Tens place of LED: Data format 0: 1-8-2-N format, RTU 1: 1-8-1-E format, RTU 2: 1-8-1-O format, RTU 3: 1-7-2-N format, ASCII 4: 1-7-1-E format, ASCII 5: 1-7-1-O format, ASCII Hundreds place of LED: wiring mode 0: Direct cabling (232/485)	1	001	×	√	×

			1: MODEM (232)					
P15.02	Local address	Local address	0~247, 0 is the broadcast address	1	5	×	√	×
P15.03	Communication timeout detection time	Communication timeout time	0.0~1000.0s	0.1	0.0s	×	√	×
P15.04	Response delay of the drive	Response delay of the drive	0~1000ms	1	5ms	×	√	×
P15.05	Reserved function 1 for user	Reserved function 1 for user	0~65535	1	0	×	√	○
P15.06	Reserved function 2 for user	Reserved function 2 for user	0~65535	1	0	×	√	○
Group P16: Keyboard display setting parameters								
P16.00	LED display parameter selection 1 when running	Running display 1	Binary setting: 0: No display; 1: Display Unit place of LED: BIT0: Output frequency (Hz) BIT1: Preset frequency (Hz flashing) BIT2: Output current (A) Tens place of LED: BIT0: Running rotating speed (r/min) BIT1: Preset rotating speed (r/min, flashing) BIT2: Running line speed（m/s） BIT3: Preset line speed (m/s, flashing) Hundreds place of LED: BIT0: Output power BIT1: Output toque (%) Note: The default display shall be output frequency when all the parameters are 0	1	007H	×	√	○
P16.01	LED display parameter selection 2 when running	Running display 2	Binary setting: 0: No display; 1: Display Unit place of LED: BIT0: Output voltage (V) BIT1: AI1（V） BIT2: AI2（V） Tens place of LED: BIT0: Analog closed loop feedback (%) BIT1: Analog closed loop reference (%, flashing) BIT2: Terminal status (without unit)	1	00	×	√	○

			BIT3: DC bus voltage					
P16.02	LED display parameter selection when stop	Stop display	Binary setting: 0: No display; 1: Display Unit place of LED: BIT0: Preset frequency (Hz) BIT1: Running speed (r/min) BIT2: Preset speed (r/min) BIT3: DC bus voltage (V) Tens place of LED: BIT0: Running line speed (m/s) BIT1: Preset line speed (m/s) BIT2: Analog closed loop feedback (%) BIT3: Analog closed reference (%) Hundreds place of LED: BIT0: AI1 (V) BIT1: AI2 (V) BIT2: Reserved BIT3: Terminal status (without unit) Note: The default display shall be set frequency when all the parameters are 0	1	009H	×	√	○
P16.03	Line speed coefficient	Line speed coefficient	0.1%~999.9% Line speed = Operation frequency × P16.03 Preset line speed = Preset frequency × P16.03	0.1%	1.0%	×	√	○
P16.04	Rotating speed display coefficient	Rotating speed coefficient	0.1%~999.9% Running rotating speed = running frequency × motor rated rotating speed/motor rated frequency × P16.04 Preset rotating speed = Preset frequency × motor rated rotating speed/motor rated frequency × P16.04	0.1%	100.0%	×	√	○
P16.05	Close loop analog display coefficient	Closed loop display coefficient	0.1%~999.9% Note: The close loop analog reference/feedback displays range is 0~9999.9	0.1%	100.0%	×	√	○
P16.06	Inverter module temperature	Inverter module temperature	0.0~150.0℃	0.1℃	0.0	×	√	*
P16.07	Rectifier module temperature	Rectifier module temperature	0.0~150.0℃	0.1℃	0.0	×	√	*
P16.08	Motor temperature measured	Motor temperature measured	0℃~200℃	1℃	0	×	√	*
P16.09	Accumulate	Accumulated	0 ~ maximum 65535 hours	1hour	0	×	√	*

	d power-on hours	power-on hours						
P16.10	Accumulated running hours	Accumulated work hours	0 ~ maximum 65535 hours	1hour	0	×	√	*
P16.11	Accumulated running hours of fan	Accumulated running hours of fan	0 ~ maximum 65535 hours	1hour	0	×	√	*
Group P40: Fieldbus option parameters								
P40.00	Option type	Option type	000: No communication option 001: Profibus-DP Others: Reserved	1	0	×	√	*
P40.01	Option hardware version	Option hardware version	0.00~99.99	1	0	×	√	*
P40.02	Option software version	Option software version	0.00~99.99	1	0	×	√	*
P40.03~ P40.21	Reserved	Reserved						
P40.22	Option reset selection	Option reset selection	0: Do not reset or reset successfully 1: Enable option reset	1	0	×	√	○
P40.23	Profibus-DP PPO type selection	Profibus-DP PPO type selection	1~5:PPO1~PPO5	1	1	×	√	○
P40.24	Communication baud rate display or selection	Communication baud rate display or selection	Profibus-DP: Display the current communication baud rate 0: 9.6 kbps; 1: 19.2 kbps; 2: 45.45 kbps; 3: 93.75 kbps; 4: 187.5 kbps; 5: 500 kbps; 6: 1.5 Mbps; 7: 3 Mbps; 8: 6 Mbps; 9: 12 Mbps Other options: Reserved	1	0	×	√	○
P40.25	Option fault display	Option fault display	0: Option is normal 1:Option wire-break or other faults	1	0	×	√	*
P40.26	Communications disconnection detection time	Communications disconnection detection time	0.0~10.0s	0.1	0.0	×	√	○
P40.27~ P40.29								
P40.30~ P40.39	Bus output data mapping	Bus output data mapping	0~9999 Please refer to the Option Manual for details	1	0	×	√	○

P40.40~ P40.49	Bus input data mapping	Bus input data mapping	0~9999 Please refer to the Option Manual for details	1	0	×	√	○
Group P97: Protection and fault parameters								
P97.00	Fault protection and alarm property setting 1	Fault protection and alarm property setting 1	Unit place of LED: Action upon communication fault 0: Activate protection and coast to stop 1: Alarm and keep running 2: Alarm and stop in the stop mode (only in serial port control mode) 3: Alarm and stop in the stop mode (in all control modes) Tens place of LED: Action upon contactor abnormality 0: Activate protection and coast to stop 1: Alarm and keep running Hundreds place of LED: Action upon EEPROM abnormality 0: Activate protection and coast to stop 1: Alarm and keep running Thousands place of LED: Action upon 24V/±10V short circuit 0: Activate protection and coast to stop 1: Alarm and keep running	1	0000	×	√	×
P97.01	Fault protection and alarm property setting 2	Fault protection and alarm property setting 2	Unit place of LED: Action upon phase loss 0: Activate protection upon input and output phase loss 1: No protection upon input phase loss 2: No protection upon output phase loss 3: No protection upon input and output phase loss Tens place of LED: Action upon loss of external analog frequency input 0: No action 1: Activate protection and coast to stop 2: Alarm and keep running Hundreds place of LED: Action upon motor overheat 0: Activate protection and decelerate to stop 1: Activate protection and coast to stop 2: Alarm and keep running Thousands place of LED: Action upon analog input (AI1, AI2) fault 0 : Activate protection and decelerate	1	0000	×	√	×

			to stop 1: Activate protection and coast to stop 2 : Alarm and keep running					
P97.02	Fault protection and alarm property setting 3	Fault protection and alarm property setting 3	Unit place of LED: Action upon temperature sampling disconnection 1: Activate temperature protection upon inverter and rectifier module and stop in the stop mode 2: Activate temperature protection upon inverter and rectifier module and coast to stop 3: Temperature alarm upon inverter and rectifier module and keep running 4: No action to rectifier, activate temperature protection upon inverter and stop in the stop mode Tens place of LED: Action upon under-voltage fault indication 1 : No action 2: Action (under-voltage is regarded as a kind of fault) Hundreds place of LED: Action upon auto-reset interval fault indication 1 : No action 2 : Action Thousands place of LED: Fault lockup function selection 1 : Prohibited 2 : Open (without fault output) 3 : Open (with fault output)	1	0000	×	√	×
P97.03	Overload protection setting for motor	Overload protection setting	Unit place of LED: Overload compensation mode 0: No action 1: Common motor (with low-speed compensation) 2: Variable-frequency motor (without low-speed compensation) Tens place of LED: Overload pre-alarm detection selection 0: Always detect 1: Detect only at constant speed Hundreds place of LED: Overload pre-alarm action selection 0: Alarm and keep running 1: Activate protection and coast to stop Thousands place of LED: Overload detection level selection 0: Relative to rated current of the	1	0001	×	√	×

			motor (Er.oL1) 1: Relative to rated current of the drive (Er.oL2)					
P97.04	Overload pre-alarm detection level	Overload detection level	20.0%~200.0%	0.1%	130.0%	×	√	○
P97.05	Overload pre-alarm detection time	Overload detection time	0.0~60.0s	0.1s	5.0s	×	√	○
P97.06	Motor over-temperature protection point	Motor over-temperature protection point	0.00~10.00V	0.01	10.00	×	√	○
P97.07	Over-voltage stall selection	Over-voltage stall selection	0: Disabled (when the braking resistor is installed) 1: Enabled	1	1	×	√	×
P97.08	Over-voltage point at stall	Over-voltage point at stall	120.0%~150.0%Udce	0.1%	140.0%	×	√	×
P97.09	Auto current limiting action selection	Auto current limiting action	0: Disabled at constant speed 1: Enabled at constant speed Note: Always enabled for acceleration/deceleration	1	1	×	√	×
P97.10	Auto current limiting level	Current limiting level	20.0%~200.0%Ie	0.1%	G:150.0%; P:110.0%	×	√	×
P97.11	Frequency reduction rate upon current limiting	Frequency reduction rate	0.00~99.99Hz/s	0.01Hz/s	10.00 Hz/s	×	√	○
P97.12	Grounding short circuit detection upon power-up	Grounding short circuit detection upon power-up	0: Disable 1: Enable (enabled for model of 7.5kW and below)	1	1	×	√	○
P97.13	Auto reset times	Auto reset times	0: No function 1~100: Auto reset times Note: Auto reset is not available for module protection, external device fault and AI over-current fault	1	0	×	√	×
P97.14	Auto reset interval	Reset interval	2.0~20.0s per time	0.1s	5.0s	×	√	×
P97.15	The first	First new	0: No abnormal record	1	0	×	√	*

	fault type	fault	1: Over-current during the drive acceleration (Er.oC1) 2: Over-current during the drive deceleration (Er.oC2) 3: Over-current when the drive is running with constant speed (Er.oC3) 4: Over-voltage during the drive acceleration (Er.oU1) 5: Over-voltage during the drive deceleration (Er.oU2) 6: Over-voltage when the drive is running with constant speed (Er.oU3) 7: Reserved 8: Input side phase loss (Er.IrF) 9: Output side phase loss (Er.odF) 10: Power module protection (Er.drv) 11: Inverter bridge over-temperature (Er.oH1) 12: Rectifier bridge over-temperature (Er.oH2) 13: Drive overload (Er.oL1) 14: Motor overload (Er.oL2) 15: External fault（Er.EFT） 16: EEPROM read-write error (Er.EEP) 17: Abnormal serial port communication (Er.SC1) 18: Abnormal contactor (Er.rLy1) 19: Abnormal current detection circuit (Er.CUr), Hall or amplifying circuit 20: System interference (Er.CPU) 21: PID feedback lost (Er.FbL) 22: External reference command lost (Er. EGL) 23: Keyboard parameter copy error (Er.CoP) 24: Poor auto-tuning (Er.TUn) 25~27: Reserved 28: Parameter setting error (Er.PST) 29: Control board 24V power short circuit (Er.24v) 30~32: Reserved 33: Grounding short circuit (Er.GdF) 34: Large DEV deviation fault (Er.dEv) 35~37: Reserved 38: PID feedback exceeding limit (Er.Fbo) 39: Motor over-temperature (Er.oHL) 40: Reserved					

			41: Abnormal AI input fault (Er.AIF abnormal analog input) 42: Inverter module temperature sampling disconnection protection (Er.THI) 43: Rectifier module temperature sampling disconnection protection (Er.THr) 44: Short circuit of ±10V analog output power (Er.10v) 45: Abnormal internal over-current reference (Er.rEF) 46~50: Reserved Note: 1.Er.drv fault can not be reset until 10s later; 2.For continuous over-current less than 3 times (including 3 times), it can not be reset until 6s later; if it is more than 3 times, it can not be reset until 200s later; 3.The keyboard displays AL.xxx in case of any fault (e.g. in case of the contactor fault, keyboard displays Er.xxx if there is protection action, and displays AL.xxx if continuing running with alarm)					
P97.16	The second fault type	The second fault type	The same as P97.15	1	0	×	√	*
P97.17	The third fault type	The third fault type	The same as P97.15	1	0	×	√	*
P97.18	DC bus voltage at the 3rd fault	DC bus voltage at the 3rd fault	0~999V	1V	0V	×	√	*
P97.19	Actual current at the 3rd fault	Actual current at the 3rd fault	0.0~999.9A	0.1A	0.0A	×	√	*
P97.20	Running frequency at the 3rd fault	Running frequency at the 3rd fault	0.00Hz~3000.00Hz	0.01Hz	0.00Hz	×	√	*
P97.21	Drive running status at the 3rd fault	Drive running status at the 3rd fault	0~FFFFH The same as P01.17	1	0000	×	√	*
P97.22	Inverter module temperature at the 3rd fault	Inverter module temperature at the 3rd fault	0.0~150.0℃	0.1℃	0.0	×	√	*

P97.23	Rectifier module temperature at the 3rd fault	Rectifier module temperature at the 3rd fault	0.0~150.0℃	0.1℃	0.0	×	√	*
P97.24	DC bus voltage at the 2nd fault	DC bus voltage at the 2nd fault	0~999V	1V	0V	×	√	*
P97.25	Actual current at the 2nd fault	Actual current at the 2nd fault	0.0~999.9A	0.1A	0.0A	×	√	*
P97.26	Running frequency at the 2nd fault	Running frequency at the 2nd fault	0.00Hz~3000.00Hz	0.01Hz	0.00Hz	×	√	*
P97.27	Drive running status at the 2nd fault	Drive running status at the 2nd fault	0~FFFFH The same as P01.17	1	0000	×	√	*
P97.28	Inverter module temperature at the 2nd fault	Inverter module temperature at the 2nd fault	0.0~150.0℃	0.1℃	0.0	×	√	*
P97.29	Rectifier module temperature at the 2nd fault	Rectifier module temperature at the 2nd fault	0.0~150.0℃	0.1℃	0.0	×	√	*
P97.30	DC bus voltage at the first fault	DC bus voltage at the first fault	0~999V	1V	0V	×	√	*
P97.31	Actual current at the first fault	Actual current at the first fault	0.0~999.9A	0.1A	0.0A	×	√	*
P97.32	Running frequency at the 1st fault	Running frequency at the 1st fault	0.00Hz~3000.00Hz	0.01Hz	0.00Hz	×	√	*
P97.33	Drive running status at the 1st fault	Drive running status at the 1st fault	0~FFFFH The same as P01.17	1	0000	×	√	*
P97.34	Inverter module temperature at the 1st fault	Inverter module temperature at the 1st fault	0.0~150.0℃	0.1℃	0.0	×	√	*

P97.35	Rectifier module temperature at the 1st fault	Rectifier module temperature at the 1st fault	0.0~150.0℃	0.1℃	0.0	×	√	*
Group P98: Drive parameters								
P98.00	Serial No.	Serial No.	0~FFFF	1	G:200 P:20A	×	√	*
P98.01	Software version No.	Software version No.	0.00~99.99	0.01	Manufacturer setting	×	√	*
P98.02	User-customized version No.	User-customized version No.	0~9999	1	Manufacturer setting	×	√	*
P98.03	Rated capacity	Rated capacity	Output power (0~999.9KVA) (set by the model automatically)	0.1kVA	Manufacturer setting	×	√	*
P98.04	Rated voltage	Rated voltage	0~999V (set by the model automatically)	1V	Manufacturer setting	×	√	*
P98.05	Rated current	Rated current	0~999.9A (set by the model automatically)	0.1A	Manufacturer setting	×	√	*
P98.06	Drive series selection	Drive series selection	0: 220V 1: 380V 2: 400V 3: 415V 4: 440V 5: 460V 6: 480V	1	Manufacturer setting	×	√	*

Chapter 6 Parameter Description

The parameter format is as follows:

Menu No.	Menu name	Value range (default value)

6.1 System management parameters (Group P00)

P00.00	Menu mode selection	0~2 (0)

0: Quick menu mode

Only the parameters related to the quick running of the drive will be displayed. To start the drive quickly, change the parameters under this menu mode.

1: Full menu mode

Display all the parameters (excluding the hidden function codes associated to the function code).

2: Verification menu mode

Only the parameters that are different from the leave-factory values will be displayed (except for P00.03).

P00.01	User password	0~65535 (0)

The password setting function is used to prohibit the unauthorized person from viewing and modifying the function parameters.

To set the password:

If you need this function, input a five-digit number as the user password and then press ENTER/DATA to confirm. After the confirmation, you need to re-enter this function code to input the same value and press ENTER/DATA to confirm within 10s. When “P.SEt” is displayed, the password is successfully set. If there is no other key operation within 5 minutes or re-power after power down, the password will become effective automatically.

To change the password:

Press MENU/ESC to enter the password verification status and input the correct original five-digit password to enter the parameter editing status. Select P00.01 (at this moment, P00.01 displays 00000). Setting the new password is the same as above.

To clear the password:

Press MENU/ESC to enter the password verification status and input the correct original five-digit password to enter the parameter editing status. Select P00.01 (at this moment, P00.01 displays 00000). The process of clearing password is the same as that of setting new password, however, you need to input 0000 twice. When the password is successfully cleared, “P.Clr” is displayed.

Note

Please keep the user password properly. This is no user password as default.

P00.02	LCD display language selection	0~1 (0)

0: Chinese

1: English

This function is only enabled for configuring the operation panel of the LCD.

P00.03	Parameter protection setting	0~2 (0)

The setting of this function code determines the protection class of the drive parameters. The settings are as follows:

0: All the data can be changed

1: Only the main set frequency digital setting (P02.05) and this function code can be changed

2: Only this function code can be changed

To change other function code settings, please set the value of this function code to be 0 first. When the parameter is changed, to protect the parameter, you can set the desired protection class for it.

P00.04	Selection of key functions	0~371FH (0100)

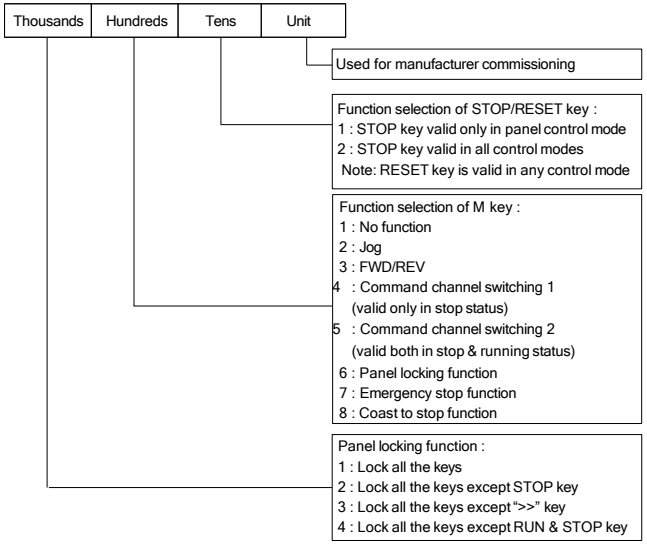

Fig.6-1 Selection of key functions

Unit place: Used for manufacturer commissioning, reserved

Tens place: Function selection of the STOP/RESET key

It is used to set the function scope and working mode of the STOP/RESET key of the keyboard when it is used as the stop key.

Table 6-1 Working mode of operation panel

Unit place	Function	Description
0	Invalid in non-panel control mode	The STOP key is valid only in the panel control mode
1	Stop in the	Valid in the command channel of panel, terminal and serial port

	stop mode under the non-panel control mode	When this key is pressed, the drive will stop in the stop mode set by P08.06.
2	Coast to stop in non-panel control mode	In the panel command channel, when this key is pressed, the drive will stop in the stop mode set by P08.06. In the terminal or serial port command channel, when this key is pressed, the drive will coast to stop and display Er.EFT fault.

Note

When the STOP/RESET key is used as the fault reset key “RESET”, it is enabled in all the running command channels. Double click the STOP key to coast to stop. Double click the STOP key during running, the drive will coast to stop and display Er.EFT fault.

Hundreds place: Function selection of the M key

When it is set as 0, the M key is disabled.

When it is set as 1, the M key is used as JOG key. In the operation panel command channel, press this key and hold, the drive will run in real time JOG mode. Release this key, it will stop running in JOG mode.

When it is set as 2, the M key is used as the direction switching key FWD/REV. In the operation panel command channel, it can be used to switch the output frequency direction on line.

When it is set as 3, the M key is used as the command channel switching key, which is enabled only in the stop status. The command channel switching order is as follows:

Operation panel command channel (LED of M key on) → terminal command channel (LED of M key off) →serial port command channel (LED of M key flash) → operation panel command channel (LED of M key on)

When it is set as 4, the M key is used as the command channel switching key, which is enabled in both stop and running statuses. The switching order is as above.

Note

You need to press the ENTER/DATA key within 3 seconds after switching to the desired running command channel circularly with the M key (Multi-functional key) so that it becomes enabled.

When it is set as 5, the M key is used as the Multi-functional panel locking key. Now, press the M key and press the ∧ key three times at the same time to lock the panel. The locking mode of the panel depends on the thousands place of the function code. To unlock the panel, set the thousands place as 5, press the M key and press the ∨ key three times at the same time, then the panel will be unlocked. When this place is set as 0, this is no panel locking function.

When it is set as 6, the M key is used as the emergency stop key. Under any command channel , once this key is pressed, the drive will perform the emergency stop command (like the terminal emergency stop function) during running.

When it is set as 7, the M key is used to coast to stop the drive. Under any command channel, once this key is pressed, the drive will coast to stop.

Thousands place: Locking function of the operation panel

It is used to set the locking range of keys on the operation panel.

Table 6-2 Locking range of keys

Hundreds place	Function	Description
0	Lock all the key	Lock all the keys on the operation panel. When the locking function is enabled, all the keys on the operation panel are disabled.
1	Lock all the keys except the STOP/RESET key	Lock all the keys except the STOP/RESET key. When the locking function is enabled, only the STOP/RESET key can be used.
2	Lock all the keys except the SHIFT key	Lock all the keys except the >> key. When the locking function is enabled, only the “>>” key can be used.
3	Lock all the keys except the RUN, STOP/RESET key	Lock all the keys except the Run and STOP keys. When the locking function is enabled, only the Run and STOP keys can be used.

P00.05	Parameter initialization	0~3 (0)

0: Parameter changing status

If the parameter value of this function code is set as 0, all the parameters can be changed.

1: Clear fault memory information

If the parameter value of this function code is set as 1, the content of the fault record (P97.15~P97.21) will be cleared.

2: Restore to leave-factory value

If the parameter value of this function code is set as 2, the function codes of the Group P97.15 will be restored to the leave-factory values based on the drive type, except for the user password (P00.01), the drive status display parameters (Group P01) and the motor parameters (Group P03) and P12.04.

3: Restore the quick start function group only

If the parameter 3 is saved in this function code, only the parameters related to the quick running of the drive will be restored.

P00.06	Parameter copy	0~3 (0)

0: Disabled

1: Uploading parameter

When it is set as 1 and confirmed, the drive will upload all the function code setting values of Group P00~P98 in the control panel to the EPPROM of the operation panel to store.

2: Downloading parameters

When it is set as 2 and confirmed, the drive will download all the function code setting values of Group P00~P98 from the operation panel to the internal control panel to store.

3: Downloading parameters (Except the motor parameters)

When it is set as 3 and confirmed, the drive will download all the function code setting values of Group P00~P98 from the operation panel to the internal control panel to store. (Except the status display parameters of Group P01, motor parameters of Group P03 and parameters of P98.)

Note

1.For the operation panel, the parameters shall be uploaded first, otherwise, the memory of the operation panel is blank. When the parameters are uploaded once, the function code parameters will be saved into the operation panel for ever.

2.Before downloading the parameters to the drive, the drive will check the integrity and version of the function code parameters in the operation panel. If the memory is blank or the parameter is incomplete or the parameter version is inconsistent with the current drive version (the number of function codes is different), it is not allowed to download the parameter and the copy error information will appear.

3.When the parameters are downloaded, the parameters in the operation panel still exist, so they can be copied by multiple drives repeatedly.

6.2 Status display parameters (Group P01)

The function code parameters of Group P01 are used to monitor some status parameters of the drive and the motor. They also can be used to display the frequency reference channel and set the parameters like frequency, PID reference, PID feedback and PID error.

P01.00	Main reference frequency channel	0~10 (0)

Monitoring the channel of the main set frequency under common running mode. It displays 0 under non-common running mode.

P01.01	Main reference set frequency	-3000.00~3000.00(0.00)

Monitoring the main set frequency under common running mode. It displays 0 under non-common running mode.

P01.02	Auxiliary reference set frequency	-3000.00~3000.00(0.00)

Monitoring the auxiliary set frequency under common running mode. It displays 0 under non-normal running mode or incase of no auxiliary reference.

P01.03	Set frequency	-3000.00~3000.00(0.00)

Monitoring the final frequency combined by the main and auxiliary frequency. The positive value stands for forward running and the negative value stands for reverse running.

P01.04	Frequency command (after Acc/Dec)	-3000.00~3000.00(0.00)

Monitoring the output frequency of the drive after the acceleration/deceleration, including the frequency direction.

P01.05	Output frequency	-3000.00~3000.00(0.00)

Monitoring the output frequency of the drive, including the frequency direction.

P01.06	Output voltage	0~480 (0)

Monitoring the output voltage of the drive.

P01.07	Output current	0.0~3Ie (0.0)

Monitoring the output current of the drive.

P01.08	Torque current	-300.0~300.0%(0.0%)

Monitoring the percentage of the drive torque current relative to the motor rated current.

P01.09	Flux current	0~100.0%(0.0%)

Monitoring the percentage of the flux current relative to the motor rated current.

P01.10	Output torque	-300.0~300.0%(0.0%)

Monitoring the percentage of the output torque of the drive relative to the motor rated torque.

P01.11	Motor power	0~200.0%(0.0%)

Monitoring the percentage of the output power of the drive relative to the motor rated power.

P01.12~P01.13	Reserved	0
P01.14	High level of output (kWh)	0~65535*10000kwh (0)
P01.15	Low level of output (kWh)	0~9999kwh (0)

Monitoring the output power of the drive.

P01.16	DC bus voltage	0~800V (0)

Monitoring the DC bus voltage of drive.

P01.17	Operation state of drive	0~FFFFH (0)

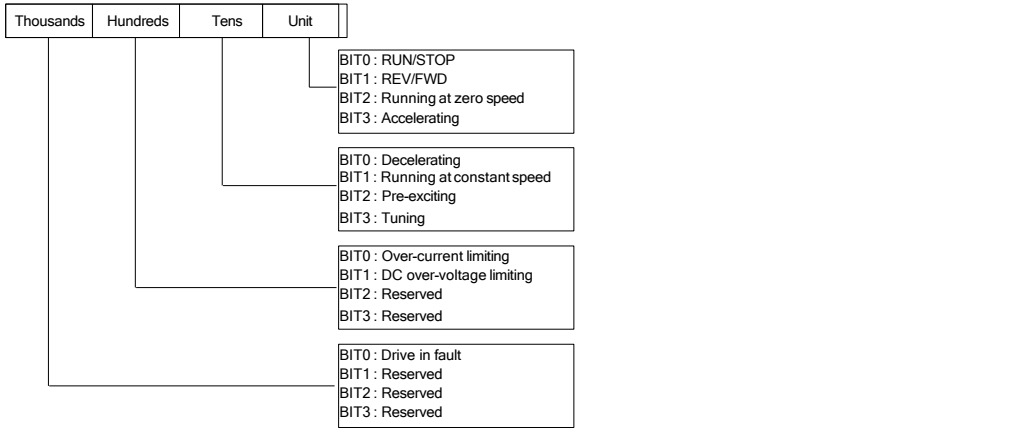

Fig.6-2 Operation state of drive

Unit place of LED:

BIT0: RUN/STOP

When the drive is in stop state, the value for the BIT0 place is 0, otherwise, it is 1.

BIT1: REV/FWD

When the drive runs forward, the value for the BIT1 place is 0, otherwise, it is 1.

The corresponding bit will be set to 1 when the condition is met for other bits.

P01.18	State of digital input terminal	0~3FH (00)

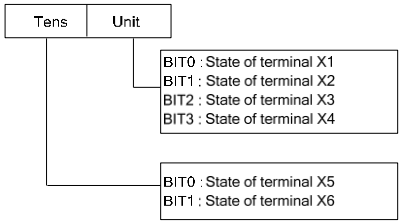

Fig.6-3 State of digital input terminal

Displaying the ON/OFF state of 6 terminals (X1~X6). “0” means that the terminal is in “OFF” state and “1” means that the terminal is in “ON” state.

P01.19	State of digital output terminal	0~7H (0)

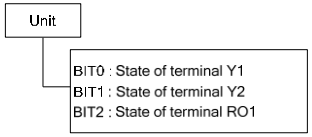

Fig.6-4 State of digital output terminal

The function code P01.19 can display the state of the output terminals (Y1 and Y2) and the relay RO1. When the signal is output, the corresponding place of P01.19 will be set as 1. For example, if the signals are output from the terminal Y1 only, the place of BIT0 will be set as 1, therefore, the value displayed by P01.19 is 1.

P01.20	AI1 input voltage	-10.00~10.00V(0.00V)
P01.21	AI2 input voltage	-10.00~10.00V(0.00V)

P01.20~P01.21 are used to display the analog input signal before the adjustment.

Note

When the current input is selected for the analog input, the AI input range is 4 to 20mA, and the corresponding display range is 2 to 10.

P01.22	Reserved	0
P01.23	AO1 output	0.0~100.0%(0.0%)

P01.23 is used to display the percentage of the analog output relative to the full range. For example, the function of AO1 is set as “output frequency”. If the maximum frequency is 100Hz and actual running frequency is 50Hz, P01.23 will displays 50%.

P01.24	Reserved	0
P01.25	Process closed loop reference	-100.0~100.0%(0.0%)
P01.26	Process closed loop feedback	-100.0~100.0%(0.0%)
P01.27	Process closed loop error	-100.0~100.0%(0.0%)

P01.28	Process closed loop output	-100.0~100.0%(0.0%)

P01.25~P01.28 are used to display the percentage of the process closed loop reference, feedback, error and output in Group P14 relative to the full range.

P01.29	Estimated temperature of motor	0~200℃ (0)

The estimated temperature of motor indicates the motor temperature estimated. Temperature display range: 0~150℃; precision: 5%.

P01.30～P01.31	Reserved	0
P01.32	Torque reference	-300.0~300.0% (0.0%)

Corresponding value of the torque reference command.

P01.33～P01.41	Reserved	0
P01.42	Pulse frequency of terminal X6	0.0~100.0kHz (0.0)

Indicating the input pulse frequency of terminal X6.

6.3 Basic parameters (Group P02)

P02: Basic parameters

The group of basic parameters are mainly used to the basic parameters that are necessary for the drive operation, such as control mode, main/auxiliary frequency reference and calculation, acceleration/deceleration time, etc. The set frequency of the MV200 drive can be combined by the main set frequency and the auxiliary set frequency. P02.04~P02.06 are used to define the main set frequency and P02.07~P02.09 are used to define the auxiliary frequency. The Fig. 6-5 shows the process of adjusting the proportion of the main set frequency and the auxiliary set frequency to form the set frequency.

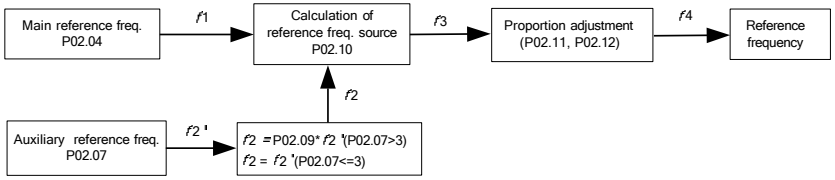

Fig.6-5 Diagram for combining the set frequency

P02.00	Reserved	0
P02.01	Motor selection	0~1 (0)

0: Motor 1

1: Motor 2

The parameters of motor 1 and motor 2 correspond to the function codes of Group P03. Corresponding parameters will be displayed based on the motor selected.

P02.02	Running command channel selection	0~3(0)

MV200 has four types of running command channels as below:

0: Operation panel running command channel

To start and stop through the RUN, STOP and M keys on the operation panel.

1: Terminal running command channel

To start and stop through the external control terminals FWD, REV, JOG FWD、JOG REV, etc.

2: Serial port running command channel

To start and stop through the serial port.

3: Field bus command channel

To start and stop through the Field bus.

Note

Even in the running process, modifying this function code parameter or using the external terminal or pressing the M key can change the running command channel. Please use it carefully!

P02.03	Running direction setting	0~1 (0)

This function is applicable to the operation panel running command channel and serial port running command channel. It is disabled for the terminal running command channel.

0: FWD

1: REV

P02.04	Main reference frequency source selection	0~8 (0)

0: Digital reference 1, adjusting with the ∧ & ∨ keys on the operation panel

When the drive is powered on, it will use the value of the function code P02.05 as the current set frequency.

When the drive is in the running or stop status, the current set frequency of the drive can be changed through the ∧ & ∨ keys on the operation panel.

1: Digital reference 2, adjusting with terminal UP/DOWN

In this mode, when the drive is powered on, it will use the value of the function code P02.05 as the current set frequency directly. When the drive is in the running or stop status, its current set frequency can be set by setting the functions of the external control terminal.

When this setting mode is selected, the following parameters shall be set beforehand:

1) Define the function of two external control terminals as 14 and 15 respectively among parameters P09.00~P09.05.
2) With the function code P09.09, set the value change rate when setting the frequency with the UP/DOWN terminal.

When the digital reference mode 2 is selected, the wiring diagram is as shown in Fig. 6-6:

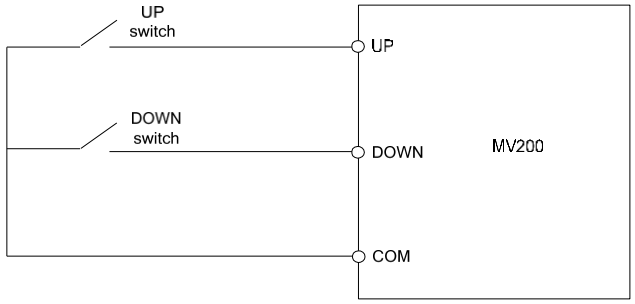

Fig.6-6 Wiring diagram for the mode of digital reference 2

If the terminal is closed validly, the relationship between the status setting combination of two external switches and current set frequency of the drive is as shown in Table 6-3.

Table 6-3 Status of external switches and current set frequency of the drive

Terminal UP on-off status	Off		On	
Terminal DOWN on-off status	Off	On	Off	On
Current set frequency of the drive	Maintain	Decrease	Increase	Maintain

2: Digital reference 3, serial port communication reference

Change the set frequency via the serial port frequency setting command.

3: AI analog reference

The analog reference has 2 independent physical channels: AI1, AI2.

AI is the analog signal input channel. When AI is the voltage signal input, its voltage input range is -10V~0V~+10V. The specifications for the analog input signal (-10V~0V~+10V) after adjustment are as follows:

For the segment 0V~+10V (FWD), the corresponding frequency can be defined in the function code of Group P10.

For the segment 0V~-10V (REV), the corresponding frequency can be defined in the function code of Group P10.

4: Terminal pulse (PULSE) reference

The frequency setting is confirmed by the terminal pulse frequency and can be input by X6 only, please refer to definition in the function code of Group P09 for details.

5: Simple PLC running

The frequency setting is confirmed by the simple PLC program. When the drive is powered on, it will use the value of the function code of P13.01 as the current set frequency directly.

6: Process closed loop PID

The frequency setting is determined by the calculation result of the process closed loop PID.

7: Multi-speed running

In this mode, when the drive is powered on, it will use the value of the function code P02.05 as the current set frequency directly. The running frequency is determined by the terminal function, the multi-speed is

the value of P02.05 as default. Select the multi-speed running function according to the terminal function and run with corresponding speed when the terminal input is enabled. Please refer to the explanation to the function code for details.

8: Field bus card reference

Set the reference via the Field bus card.

Note

The frequency calculation relationship curves for the frequency main reference modes 3 and 4 are determined by the function code of Group P10. When the main frequency reference adopts the analog or pulse reference, the positive and negative polarity of the output main set frequency is determined by the selection of the function code of Group P10, which determine whether the reference adopts the analog or pulse value, or let it determined by the function code of Group P02.03. In the contrast, when the frequency reference is provided under other modes, the positive and negative polarity of the main set frequency is determined by P02.03 completely. The auxiliary frequency superimposition is not applicable to the output frequency for the main frequency reference modes 5, 6 and 7. The calculation of the output frequency for these three modes are independent.

P02.05	Digital setting of main reference frequency	P02.16~P02.17 (50.00)

When the main set frequency channel is defined as the digital reference (P02.04=0, 1, 2, 7), this function parameter represents the initial set frequency of the main set frequency of the drive.

P02.06	Main & auxiliary reference digital freq. control	0000~1111H (0000)

For the main reference & auxiliary reference digital frequency control, the main reference frequency control is only enabled for P02.04=0, 1, 2, and the auxiliary reference frequency control is only enabled for P02.07=1~3.

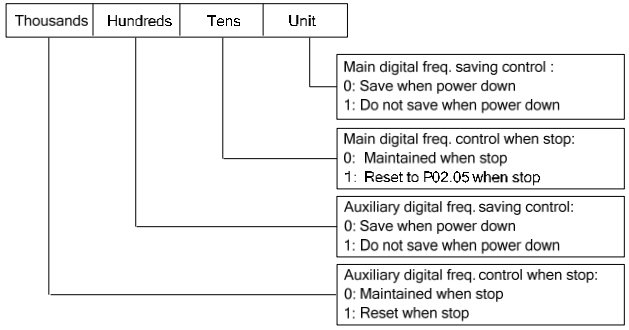

Fig.6-7 Digital frequency control LED setting

Unit place: Main digital frequency storage control

0: The set frequency will be saved upon power down

When the drive is powered down or under voltage, P02.05 will be refreshed automatically with the current actual frequency.

1: The set frequency will not be saved upon power down

When the drive is powered down or under voltage, P02.05 will remain the same frequency.

Tens place: Main digital frequency stop control

0: The set frequency will be maintained upon stop

When the drive is stop, the set value of the main digital frequency is the final modified value.

1: The set frequency will restore to P02.05 upon stop

When the drive is stop, the set value of the main digital frequency will restore to P02.05 automatically.

Hundreds place: Auxiliary digital frequency storage control

0: The auxiliary frequency will be saved upon power down

The auxiliary frequency will be saved into P02.08 upon power down

1: The auxiliary frequency will not be saved upon power down

Not be saved upon power down.

Thousands place: Auxiliary digital frequency stop control

0: The auxiliary frequency will be maintained upon stop

The auxiliary frequency is maintained upon stop.

1: The set frequency is reset upon stop

The auxiliary frequency is reset upon stop.

P02.07	Auxiliary reference frequency source selection	0~7 (0)

0: No auxiliary reference

The set frequency is composed of the main set frequency only and the auxiliary set frequency is 0 by default

1: Digital reference 1, adjusting with the ∧ & ∨ keys on the operation panel

The initial value of the auxiliary frequency is P02.08, which can be adjusted with the ∧ & ∨ keys on the operation panel.

2: Digital reference 2, adjusting with terminal UP/DOWN

The initial value of the auxiliary frequency is P02.08, which can be adjusted with the terminal UP/DOWN.

For the setting of terminal UP/DOWN, please refer to the function codes of Group P09.

3: Digital reference 3, serial port communication reference

The auxiliary frequency is set based on the serial port reference and its initial value is the value of P02.08. The value of the auxiliary set frequency is changed through the serial port frequency setting command.

4: AI analog reference

The auxiliary frequency is set based on the AI terminal (AI1 and AI2) reference.

5: Terminal pulse (PULSE) reference

The auxiliary frequency is determined by the terminal pulse frequency and can be input by X6, please refer to the definition in the function codes of Group P09 for details.

6: Process closed loop output

The process closed loop output is used as the auxiliary reference.

7: Field bus card reference

Set the reference via the Field bus card.

Note

1. When the auxiliary frequency adopts the reference mode 4 and 5, the positive and negative polarity of the output auxiliary frequency is determined by the selection of the function code of Group P10, which determines whether the reference adopts the analog or pulse value, or let it determined by the function code of Group P02.03.

2. The main and auxiliary frequency reference channels are mutually exclusive (except for the AI channel).

3.When the main frequency source selection (P02.04) is set as 5, 6 or 7, the auxiliary frequency superimposition is not applicable. When any of the three is selected, the auxiliary frequency source selection (P02.07) will be reset and can not be set as non-zero data.

P02.08	Digital setting of auxiliary reference	0.00~3000.00 Hz(0.00)

P02.08 is enabled only when P02.07=1~3 and it is the initial value of the auxiliary set frequency under these three modes.

P02.09	Auxiliary reference coefficient	0.00~9.99 (1.00)

It is enabled only when P02.07=4~7. For the analog and pulse reference values, the auxiliary frequency shall be calculated according to the curve defined in Group P10 first and then calculating the gain with P02.09. Please refer to Fig. 6-5 for details.

P02.10	Calculation of reference frequency source	0~9 (0)

0: “+”

The sum of the main set frequency and the auxiliary set frequency is used as the set frequency.

When the positive and negative polarity of the combined frequency is opposite to that of the main set frequency, the set frequency is 0.

1: “-“

The value that the main set frequency minuses the auxiliary set frequency is used as the set frequency.

When the positive and negative polarity of the combined frequency is opposite to that of the main set frequency, the set frequency is 0.

2: “*”

The product of the main frequency and the auxiliary frequency is used as the set frequency.

When the positive and negative polarity of the main set frequency is opposite to that of the auxiliary set frequency, the set frequency is 0.

3: MAX (main set frequency and auxiliary set frequency)

Select the maximum absolute value between the main set frequency and the auxiliary set frequency as the set frequency.

When the positive and negative polarity of the auxiliary set frequency is opposite to that of the main set frequency, the set frequency is the latter.

4: MIN (main set frequency, auxiliary set frequency)

Select the minimum absolute value between the main set frequency and the auxiliary set frequency as the set frequency.

When the positive and negative polarity of the auxiliary set frequency is opposite to that of the main set frequency, the set frequency is 0.

5: Sqrt (main set frequency) + Sqrt (auxiliary set frequency)

Select the sum of the square root of the individual absolute value of the main set frequency and the auxiliary set frequency as the set frequency.

When the polarity of the auxiliary set frequency is opposite to that of the main set frequency, the auxiliary frequency will be reset and the set frequency will be the square root of the main set frequency.

6: Sqrt (main set frequency + auxiliary set frequency)

Select the square root of the absolute value of the sum of the main set frequency and the auxiliary set frequency as the set frequency.

When the polarity of the sum of the main set frequency and the auxiliary set frequency is opposite to that of the main set frequency, the set frequency will be reset.

7: Switching between main and auxiliary reference frequency source

When any function code of terminals P09.00~P09.05 is selected as 20, the reference frequency source can be switched between the main reference frequency source and auxiliary reference frequency source via the terminal change.

8: Switching between main reference frequency source and (main + auxiliary) reference frequency source

When any function code of terminals P09.00~P09.05 is selected as 20, the reference frequency source can be switched between the main reference frequency source and (main + auxiliary) reference frequency source via the terminal change.

9: Switching between auxiliary reference frequency source and (main + auxiliary) reference frequency source

When any function code of terminals P09.00~P09.05 is selected as 20, the reference frequency source can be switched between the auxiliary reference frequency source and (main + auxiliary) reference frequency source via the terminal change.

Note

When 0 selected for P02.07 and the auxiliary setting is disabled, the main/auxiliary calculation rule P02.10 will be disabled, and the set frequency will be determined by the main set frequency.

P02.11	Proportion adjustment selection of set frequency	0~2 (0)
P02.12	Proportion adjustment coefficient of set	0.0~200.0% (100.0%)

This function determines the adjustment mode of the set frequency (the combined frequency after the main set frequency is added with the auxiliary set frequency). For the following frequency code, please refer to Fig.6-5.

0: Disabled

Do not adjust the set frequency that is combined by the main and auxiliary set frequency, that is, $f_3 = f_4$

1: Adjust according to the maximum output frequency P02.15

Set frequency $f_4 = f_3 + P02.15 \times (P02.12 - 100\%)$

2: Adjust according to the current frequency

Set frequency $f_4 = f_3 + f_3 \times (P02.12 - 100\%) = f_3 \times P02.12$

P02.13	Acceleration time 1	0.0~3600.0s (6.0s)
P02.14	Deceleration time1	0.0~3600.0s (6.0s)

The acceleration time means the time needed for the drive to accelerate from 0Hz to the maximum output frequency (P02.15). The deceleration time means the time needed for the drive to decelerate from the maximum output frequency (P02.15) to 0Hz.

Note

1.The time unit (min, s, 0.1s) of the acceleration/deceleration time 1~4 can be selected through P11.01 and the default leave-factory unit is second.

2.For the drive of 22kW and below, the leave-factory value for its acceleration/deceleration time is 6.0s, for the drive of 30~45kW, it is 20.0s, and for other modes of drives, it is 30.0s.

3.When it is used independently in case of no switch of motor 1, the first acceleration/deceleration time is determined by P02.13 (acceleration time) and P02.14 (deceleration time). When it is used independently in case of no switch of motor 2, the first acceleration/deceleration time is determined by P11.04 (acceleration time) and P11.05 (deceleration time).

P02.15	Maximum output frequency	max{50,P02.16}~3000.00(50.00)
P02.16	Upper limit frequency	P02.17~P02.15 (50.00)
P02.17	Lower limit frequency	0.00~P02.16 (0.00)

The maximum output frequency is the allowable maximum output frequency of the drive, as Fmax shown in Fig. 6-8.

The upper limit frequency is the allowable maximum output running frequency set by the user, as FH shown in Fig. 6-8.

The frequency of lower limit is the allowable minimum running frequency set by the user, as FL shown in Fig. 6-8.

F_b in Fig. 6-8 is the basic running frequency, which is defined as the minimum value of corresponding output frequency when the drive output voltage reaches the maximum value.

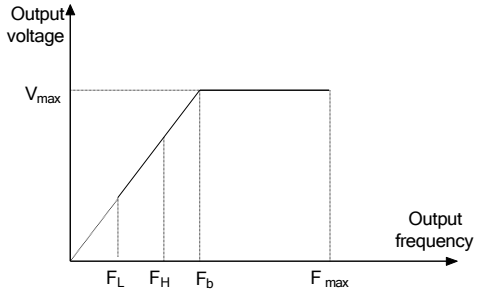

Fig.6-8 Diagram for the definition of limit frequency parameters

Note

1.The maximum output frequency, upper limit frequency and lower limit frequency shall be set carefully according to the parameters on the nameplate of the controlled motor and the demands of the operation conditions.

2.The limit range of the upper limit frequency and lower limit frequency is disabled for the JOG operation and automatic auto-tuning of the motor.

3.Besides the limit range of the upper limit frequency and lower limit frequency, the output frequency of the drive in running is also limited by the setting values of other parameters, such as the start frequency, starting frequency for stop DC braking, skip frequency, etc.

4.The relationship among the maximum output frequency, upper limit frequency and lower limit frequency is as shown in the above Fig. 6-8. Please pay attention to the size and order in setting.

5.The upper/lower limit frequency is used to limit the value of the actual output frequency to the motor. If the set frequency is higher than the upper limit frequency, it will run with the upper limit frequency; if the set frequency is lower than the lower limit frequency, it will run with the lower limit frequency; if the set frequency is lower than the start frequency, it will run with zero frequency.

6.4 Motor parameters (Group P03)

P03.00	Rated power of motor 1	0.4~999.9kw (0)
P03.01	Rated voltage of motor 1	0~P98.04 (0)
P03.02	Rated current of motor 1	0.1~999.9A (depending on model)
P03.03	Rated frequency of motor 1	1.00~3000.0 (depending on model)
P03.04	Rated rotating speed of motor 1	0~60000rpm (1440rpm)
P03.05	Power factor of motor 1	0.001~1.000 (depending on model)

They are used to set the parameters of the controlled motor 1.

To enter the parameter group of motor 1, set the parameter value of P02.01 as 0 first. To ensure the control performance, be sure to set the correct values for P03.00~P03.04 according to the nameplate parameters of the motor. P03.05 is the power factor of the motor, which will be refreshed automatically after the normal setting of rotation. You can choose not to change P03.05 manually, or choose to change it manually in the following two situations: 1) when all the settings are completed; 2) when there is no setting.

Note

The power class of the motor shall be configured according to that of the drive. Generally, it can only be two classes lower or one class higher that that of the drive. Otherwise, the control performance cannot be ensured.

P03.06	Stator resistance of motor 1	00.000~65.000(depending on
P03.07	Leakage inductance of motor 1	0000.0~2000.0(depending on

P03.08	Rotator resistance of motor 1	00.000~65.000(depending on
P03.09	Mutual inductance of motor 1	0000.0~2000.0(depending on
P03.10	No-load current (I_0) of motor 1	0.1~999.9A(depending on

The meanings of the above motor parameters are shown in Fig.6-9.

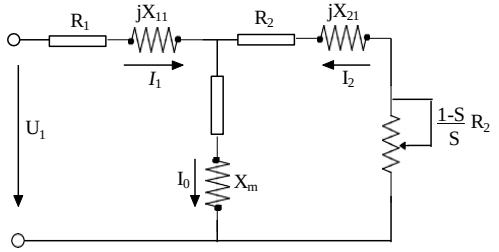

Fig.6-9 Equivalent circuit diagram for asynchronous motor in steady state

The R_1, X_{11}, R_2, X_{21}, X_m, I_o in Fig.6-9 respectively indicate the stator resistance, stator leakage inductive reactance, rotator resistance, rotator leakage inductive reactance, mutual inductive reactance and no-load current. Function code P03.07 is the sum of leakage inductive reactance of the stator and rotator.

If the parameters of the asynchronous motor are known, please write the actual values into P03.06~P03.09. P03.10 is the no-load current of asynchronous motor. You can directly enter the no-load current value.

If the motor parameter auto-tuning is conducted, the set values of P03.06~P03.10 will be refreshed after the normal completion of the auto-tuning.

After changing the motor power P03.00, the drive will set the parameters of P03.02~P03.10 to be the default parameters of the motor. (The rated voltage of motor 1 (P03.01) needs to be set according to the nameplate by the user).

P03.11	Overload protection coefficient of motor 1	20.0~110.0%(100.0%)

To provide effective overload protection for motors of different models, it is necessary to adjust the allowable maximum output current of the drive, as shown in Fig.6-10.

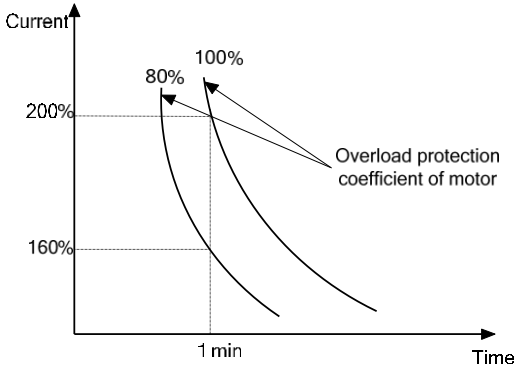

Fig.6-10 Overload protection coefficient setting of motor

The adjustment value can be set according to your need. In the same conditions, if you want to realize quick protection upon the motor overload, set a small value for P03.11; otherwise, a bigger value shall be set.

Note

If the rated current of the load motor is not consistent with the rated current of the drive, the motor overload protection can be realized by setting the function code parameter of P03.11.

P03.12	Rated power of motor 2	0.4~999.9kw(depending on model)
P03.13	Rated voltage of motor 2	0~P98.04(depending on model)
P03.14	Rated current of motor 2	0.1~999.9A(depending on model)
P03.15	Rated frequency of motor 2	1.00~3000.00(depending on model)
P03.16	Rated rotating speed of motor 2	0~60000rpm (1440rpm)
P03.17	Power factor of motor 2	0.001~1.000(depending on model)

They are used to set the parameters of the controlled motor 2.

To enter the parameter group of motor 2, set the parameter value of P02.01 as 1 first. To ensure the control performance, be sure to properly set the values of P03.12~P03.16 according to the nameplate parameters of the motor. P03.17 is the power factor of the motor, which will be refreshed automatically after the normal setting of rotation. You can choose not to change P03.17 manually, or choose to change it manually in the following two situations: 1) when all the settings are completed; 2) when there is no setting.

Note

The power class of the motor shall be configured according to that of the drive. Generally, it can only be two classes lower or one class higher than that of the drive. Otherwise, the control performance cannot be ensured.

P03.18	Stator resistance of motor 2	00.000~65.000(depending on
P03.19	Leakage inductance of motor 2	0000.0~2000.0(depending on
P03.20	Rotator resistance of motor 2	00.000~65.000 (depending on
P03.21	Mutual inductance of motor 2	0000.0~2000.0(depending on
P03.22	No-load current (I_0) of motor 2	0.1~999.9 A(depending on

The meanings of the above motor parameters are shown in Fig.6-11.

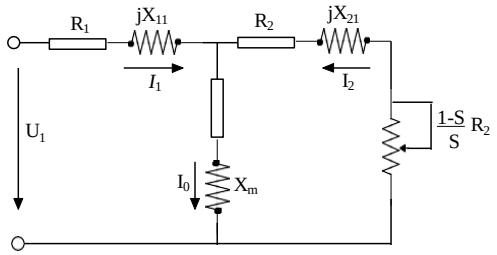

Fig.6-11 Equivalent circuit diagram for asynchronous motor in steady state

The R_1, X_{11}, R_2, X_{21}, X_m, I_o in Fig.6-11 respectively indicate the stator resistance, stator leakage inductive reactance, rotator resistance, rotator leakage inductive reactance, mutual inductive reactance and no-load current. Function code P03.07 is the sum of leakage inductive reactance of the stator and rotator. If the parameters of the asynchronous motor are known, please write the actual values into P03.18~P03.22. P03.22 is the no-load current of asynchronous motor. You can directly enter the no-load current value.

If the motor parameter auto-tuning is conducted, the set values of P03.18~P03.22 will be refreshed after the normal completion of the auto-tuning.

After changing the power of the asynchronous motor (P03.12), the drive will set the parameters of P03.14~P03.21 to be the default parameters of the motor.(The rated voltage of motor 1 (P03.13) needs to be set according to the nameplate by the user).

P03.23	Overload protection coefficient of motor 2	20.0~110.0% (100.0%)

To provide effective overload protection for motors of different models, it is necessary to adjust the allowable maximum output current of the drive, as shown in Fig.6-12.

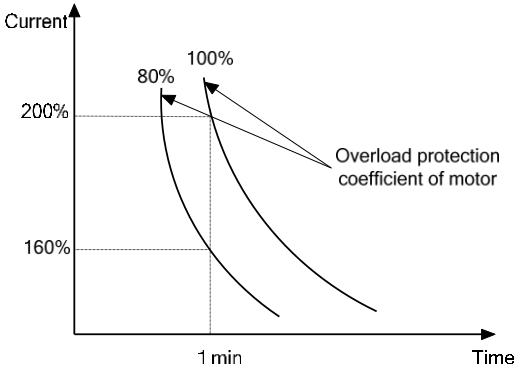

Fig.6-12 Overload protection coefficient setting of motor

The adjustment value can be set according to your need. In the same conditions, if you want to realize quick protection upon the motor overload, set a small value for P03.23; otherwise, a bigger value shall be set.

Note

If the rated current of the load motor is not consistent with that of the drive, the motor overload protection can be realized by setting the function code parameter of P03.23.

P03.24	Parameter auto-tuning	0~3 (0)

0: Disabled

1: Enabled (motor in static status)

Before the auto-tuning, be sure to enter the correct nameplate parameters of the controlled motor. If the controlled motor is motor 1, input P03.00~P03.04; if the controlled motor is motor 2, input P03.12~P03.16.

During the static setting of the asynchronous motor, the motor is in static state. The stator resistance (R1), leakage inductive reactance relative to rated frequency (X) and rotator resistance (R2) of the asynchronous motor will be automatically measured. The measured parameter values will be automatically written into P03.06, P03.07 and P03.08 (for motor 2, they will be written into P03.18, P03.19 and P03.20).

2: Enabled (motor in rotate status)

Before the auto-tuning, be sure to enter the correct nameplate parameters of the controlled motor. If the controlled motor is motor 1, input P03.00~P03.04; if the controlled motor is motor 2, input P03.12~P03.16.

During the rotation setting, the asynchronous motor is in static state first. The stator resistance (R1), leakage inductive reactance relative to rated frequency (X) and rotator resistance (R2) of the asynchronous motor will be automatically measured. And then the asynchronous motor will turn into the rotation state, and the mutual inductive reactance (X_m) and no-load current (I_0) of the motor will be automatically measured. The measured parameter values will be automatically written into P03.06~P03.10 (for motor 2, they will be written into P03.18~P03.22). P03.05 (for motor 2, P03.17) will be automatically refreshed when the rotation setting is finished.

The set value of P03.24 will be automatically configured as 0 when the auto-tuning is finished.

3: Calculating based on the nameplate parameters (only enabled for asynchronous motor)

This function is only enabled for the asynchronous motor. The drive will automatically calculate corresponding motor parameters based on the nameplate parameters of the motor set by the user, and write into P03.06, P03.07, P03.08, P03.09 and P03.10.

Auto-tuning steps of the asynchronous motor:

1) Set the P07.07 torque increase of motor 1 (or P07.16, torque increase of motor 2) as 0.
2) Properly set the function code parameters of P03.00~P03.04 for motor 1 (for motor 2, input parameters of P03.12~P03.16).
3) Properly set P02.16 (upper limit frequency). The set value of P02.16 shall not be lower than the rated frequency.
4) When P03.24 is set as 2, disconnect the motor shaft from the loads and check its safety status carefully. It is prohibited to carry out rotation setting when the motor is connected to loads.

5) Set P03.24 as 1 or 2, press the ENTER/DATA key and the RUN key, and then the auto-tuning will be started.

6) When the running LED on the operation panel is off, it indicates that the auto-tuning is finished.

Note

1.When P03.24 is set as 2, if over-voltage or over-current occurs during the auto-tuning, properly increase the acceleration/deceleration time (P02.13 and P02.14; for motor 2, please change P11.04 and P11.05 for tuning).

2.When P03.24 is set as 2 for rotation setting, disconnect the motor shaft from the loads. It is prohibited to carry out rotation setting when the motor is connected to loads.

3.Before the auto-tuning, the motor shall be in static status, otherwise, the auto-tuning cannot be normally conducted.

4.In certain situations (for instance, the motor cannot be disconnected from the loads) where it is inconvenient to conduct rotation setting, or the users does not have high motor control performance requirement, static setting can be selected, or the setting can be exempted. If the setting is not performed, be sure to enter the correct nameplate parameters of the motor.

5.If you know the correct motor parameters, please enter the correct motor parameters P03.00~P03.10 (or P03.12~P03.22).

6. If the auto-tuning fails, Er.TUN error will be reported.

P03.25～P03.28	Reserved	0

6.5 VF control parameters (Group P07)

P07.00	Motor 1 V/F curve setting	0, 17~19 (0)
P07.01	Motor 1V/F frequency 3	P07.03~P03.03(0.00Hz)
P07.02	Motor 1V/F voltage 3	P07.04~100.0% (0.0%)
P07.03	Motor 1V/F frequency 2	P07.05~P07.01(0.00Hz)
P07.04	Motor 1V/F voltage 2	P07.06~P07.02(0.00Hz)
P07.05	Motor 1V/F frequency 1	0.00~P07.03 (0.00Hz)
P07.06	Motor 1V/F voltage 1	0~P07.04 (0.0%)

P07.00~P07.06 are used to determine different V/F curves of motor 1 under different V/F control modes.

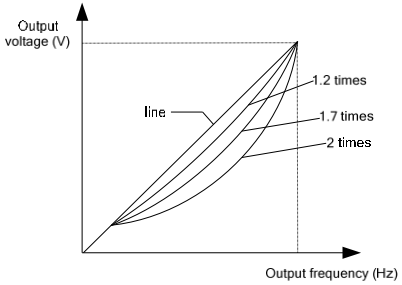

Fig.6-13 V/F curve

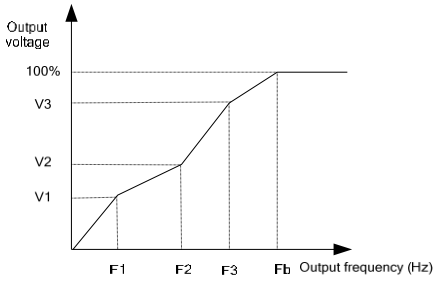

Fig.6-14 Multi-stage V/F curve

P07.00=0: Customized curve, applicable to sectional constant torque load situation, refer to Fig.6-14.

In Fig.6-14: F1<F2<F3<Fb (Fb represents the basic running frequency, generally, it is the rated frequency of the motor)

V1≤V2≤V3≤100% (V1, V2 and V3 represent the percentage of the maximum output voltage)

Table 6-4 V/F curve types

Set value	Specification	Features	Use
17	50Hz, decrease progressively based on square	Degressive torque feature	These curves can be used for the loads where the torque is proportional to the nth power of the rotating speed, such as the fan, pump, etc.
18	50Hz, decrease progressively based on the power of 1.7		
19	50Hz, decrease progressively based on the power of 1.2		

P07.07	Motor 1 torque increase	0.0~30.0% (0.0%)
P07.08	Motor 1 torque increase cut-off point	0.0~50.0% (10.0%)

To compensate the low-frequency torque features, certain increase compensation can be provided for the output voltage. P07.07 is relative to the maximum output voltage. When it is set as 0, it is automatic torque increase; when it is set as a non-zero value, it is manual torque increase, as shown in Fig.6-15.

P07.08 is used to define the percentage of the cut-off frequency for the manual torque increase relative to the basic running frequency. Please refer to the fz in Fig.6-15. The cut-off frequency is applicable to any V/F curve determined by P07.00.

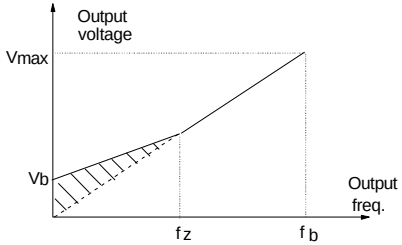

Vb : Manual torque boost Vmax: Max output voltage
fz : Cut-off freq. for torque boost
fb : Basic operating freq.

Fig.6-15 Torque increase (the increase amount is the shaded part)

Note

1. Improper setting of this parameter may cause motor over-temperature or over-current protection.
2. For the definition of fz, please refer to function code P07.08.
3.The maximum output voltage Vmax corresponds to the motor rated voltage, so it is necessary to correctly set the motor rated voltage based on the motor selected .

P07.09	Motor 2 V/F curve setting	0, 17~19 (0)
P07.10	Motor 2 V/F frequency 3	P07.12~P03.15(0.00)
P07.11	Motor 2 V/F voltage 3	P07.13~100.0%(0.0%)
P07.12	Motor 2 V/F frequency 2	P07.14~P07.10 (0.00)
P07.13	Motor 2 V/F voltage 2	P07.15~P07.11 (0.0%)
P07.14	Motor 2 V/F frequency 1	0.00~P07.12 (0.00Hz)
P07.15	Motor 2 V/F voltage 1	0.0~P07.13 (0.0%)

P07.09~P07.15 are used to determine different V/F curves of motor 2 under different V/F control modes.

P07.16	Motor 2 torque increase	0.0~30.0% (0.0%)
P07.17	Motor 2 torque increase cut-off point	0.0~50.0% (10.0%)

The same as P07.07 and P07.08.

P07.18	Motor stable factor	0~255 (10)

When the motor can not run normally due to the oscillation, increase this gain properly. The larger the gain is, the more obvious the suppression on the oscillation will be. The gain value should be as small as possible while effective motor oscillation suppression shall be ensured.

P07.19	AVR function	0~2 (2)

0: Disabled

1: Always enabled

2: Disabled only in deceleration situation

AVR means automatic voltage regulation.

When fast stop is need and there is no braking resistor, selecting “Disabled only in deceleration situation” can remarkably reduce the possibility of over-voltage fault. If there is braking resistor or the fast deceleration is not needed, please select “Always enabled”.

P07.20	Drooping control value	0~30.00 Hz(0.00Hz)

This function is applicable to the application of multiple drives driving the same load. It can realize the uniform distribution of power.

When the load of some drive is heavier, the drive will automatically reduce the output frequency according to the parameter set via this function to remove some load. During trial operation, this value can be adjusted gradually from the small value.

6.6 Start and stop control parameters (Group P08)

P08.00	Startup mode	0~2 (0)

Different start modes can be adopted for different applications.

0: Start from the startup frequency

The drive begins to run from the startup frequency P08.02 and accelerate to the set frequency after the startup frequency retention time P08.03. If the motor is still rotating upon the startup of the drive, the motor will be automatically braked to low speed before the acceleration.

1: Start form the startup frequency after braking

DC current is first supplied to perform DC magnetizing and DC braking on the motor. The volume and time for the DC injection are set by P08.04 and P08.05. After the DC braking time expires, the drive begins to run from the startup frequency P08.02 and accelerate to the set frequency after the startup frequency retention time P08.03.

2: Speed tracking

The drive will identify the speed of the rotating motor and directly start from the identified frequency. The current and voltage are smooth without any impact during the startup.

P08.01	Startup delay time	0.00~30.00s (0.00s)

The startup delay time means that the drive begins to run after the startup time P08.01 if there is any running command.

P08.02	Startup frequency	0.00~60.00Hz(0.00Hz)
P08.03	Startup frequency retention time	0.00~10.00s (0.00s)

The drive begins to run from the startup frequency P08.02 and accelerates to the set frequency after the startup frequency retention time P08.03.

Note

For the heavy duty startup applications, it will facilitate the startup if the startup frequency and retention time are properly set.

P08.04	Startup DC braking current	0.0~100.0% / 0.0~50.0% (0.0%)
P08.05	Startup DC braking time	0.00~30.00s (0.00s)

P08.04 sets the volume of the startup DC braking current, which is indicated in a percentage of the rated current of the drive.

G: 0.0~100.0%；P: 0.0~50.0%

P08.05 sets the action time for the startup DC braking.

P08.06	Stop mode	0~2 (0)

Different stop modes can be adopted for different applications.

0: Decelerate to stop

Decelerate to stop according to the set deceleration time.

1: Coast to stop

The drive locks the output and the motor coast to stop.

2: Decelerate to stop + DC braking

Decelerate to stop according to the set deceleration time, and when the frequency is lower than the DC braking initial frequency P08.12, inject the DC braking current P08.14 after the stop DC braking waiting time P08.13. The stop DC braking is determined by P08.15.

P08.07	Stop frequency detection	0.00~150.00Hz (0.50Hz)

Detecting the frequency upon the stop action is finished.

P08.08	Stop frequency detection retention time	0.00~10.00s (0.00s)

The retention time for detecting the frequency upon the stop action is finished.

P08.09～P08.11	Reserved	0
P08.12	Initial frequency for stop DC braking	0.00~60.00Hz (0.00Hz)
P08.13	Waiting time for stop DC braking	0.00~10.00s (0.00s)
P08.14	Stop DC braking current	0.0~100.0% / 0.0~50.0% (0.0%)
P08.15	Stop DC braking time	0.00~30.00s (0.00s)

Begin to inject the initial frequency of the stop DC braking current during the stop process set by P08.12.

P08.13 waiting time for the stop braking: The time interval from the moment when the running frequency reaches the initial frequency for braking (P08.12) till the DC braking is injected during decelerating to stop.

P08.14 sets the volume of the stop DC braking current, which is indicated in a percentage of the rated current of the drive.

G: 0.0~100.0%；P: 0.0~50.0%

P08.15 sets the action time for the stop DC braking.

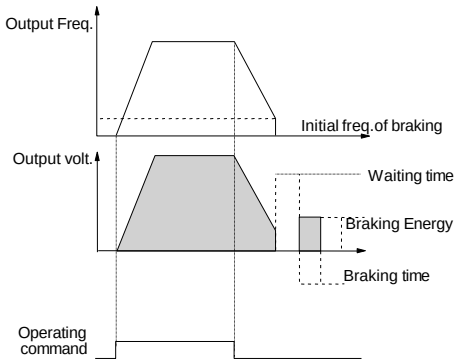

Fig.6-16 Schematic diagram for “decelerate to stop + DC braking”

P08.16	Selecting restart function upon power fault	0~1 (0)
P08.17	Waiting time for restart upon power fault	0.0~3600.0s (0.0s)

This function code is used to set whether the drive will start to run automatically and the waiting time before the automatic running under different running command channels upon the power-up after power down.

When P08.16 is set as 0, the drive will not run automatically upon the power-up after power down.
When P08.16 is set as 1, if the startup conditions are met, the drive will run automatically after the waiting time defined by P08.17 upon the power-up after power down. Please refer to Table 6-5

Table 6-5 Startup conditions for re-start upon power down

Setting of P08.16	Status before power down	Operating panel	Serial port	Three-wire terminal 1, 2	Two-wire terminal 1		Two-wire terminal 2	
		None	None	None	None	Available	None	Available
0	Stop	0	0	0	0	0	0	0
	Run	0	0	0	0	0	0	0
1	Stop	0	0	0	0	0	0	1
	Run	1	1	1	0	1	0	1

Indicates the actions of the drive upon power-up under different combination conditions. 0: Enter the standby state; 1: Start to run automatically.

Note

1.When the start/stop is controlled through the operation panel, serial port and Three-wire terminal 1&2, the command type is pulse type and there is no running command upon power-up.

2. Stop has the priority if there is any stop command.

3.When the function of re-start upon power down is enabled, if the drive is powered up again after it is not completely powered down (i.e. the drive LED displays -LU- process), it will restart in the speed tracking mode; if the drive is powered up again after it is completely powered down (i.e. the LED on the operation panel is completely off), it will restart under the mode set by P08.00.

P08.18	Anti-reverse selection	0~1 (0)

P08.19	FWD/REV dead time	0.00~360.00s(0.00s)

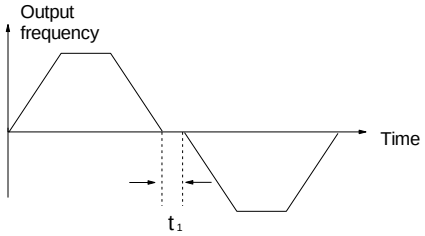

Fig.6-17 FWD/REV dead time

For some production equipment, reverse running may cause equipment damage. This function can be used to prevent the reverse running.

The waiting transition time at the output of zero frequency when the drive switches from forward running to reverse running (or from reverse running to forward running), as t_1 shown in Fig. 6-17.

P08.20	FWD/REV switching mode	0~1 (0)

0: Switch once over the zero frequency

1: Switch once over the startup frequency

P08.21	Use ratio of dynamic braking	0.0~100.0% (00.0%)
P08.22	Braking startup voltage	700~780V (750V)

The use ratio of dynamic braking P08.21 and the braking startup voltage P08.22 are only applied to the drive with built-in braking unit.

Action voltage of braking unit can be selected by adjusting P08.22. The system can be stopped rapidly by the dynamic braking with the appropriate action voltage.

P08.23	Deceleration time for emergency stop	0.00~100.00s(0.00s)

When the input signal of the emergency stop terminal (NO. 60 terminal function) is enabled, the drive begins to decelerate to stop. The deceleration time is determined by P08.23. When it is set as 0s, the drive will stop within the shortest deceleration time.

6.7 Digital input/output parameters (Group P09)

P09.00	Input terminal X1	0~95 (1)
P09.01	Input terminal X2	0~95 (2)
P09.02	Input terminal X3	0~95 (0)
P09.03	Input terminal X4	0~95 (0)
P09.04	Input terminal X5	0~95 (0)
P09.05	Input terminal X6	0~95 (0)

Table 6-6 Table of digital input terminal functions

Item	Function	Item	Function
0	No function	1	Forward running (FWD)
2	Reverse running (REV)	3	External jog forward running control input
4	External jog reverse running control input	5	Three-wire operation control
6	Multi-stage reference terminal 1	7	Multi-stage reference terminal 2
8	Multi-stage reference terminal 3	9	Multi-stage reference terminal 4
10	Acceleration/deceleration time terminal 1	11	Acceleration/deceleration time terminal 2
12	Main reference frequency pulse input (valid only for X6)	13	Auxiliary reference frequency pulse input (valid only for X6)
14	Frequency increase command (UP)	15	Frequency decrease command (DN)
16	External fault normally open input	17	External fault normally closed input
18	External interrupt normally open contact input	19	External interrupt normally closed contact input
20	Reference frequency source switching command	21	Reserved
22	External reset (RESET) input	23	Coast to stop input (FRS)
24	Acceleration/deceleration disable command	25	Stop DC braking input command
26	Simple PLC pause command	27	Reserved
28	Clearing the PLC stop memory	29	PID closed loop disabled
30	PID closed loop soft-start disabled	31	PID integral retention
32	PID integral clearing	33	Switching PID adjustment features
34	Main reference frequency source selection 1	35	Main reference frequency source selection 2
36	Main reference frequency source selection 3	37	Switching main set frequency to AI
38	Command source selection 1	39	Command source selection 2
40	Switching command to terminal	41	FWD disabled
42	REV disabled	43	Drive running disabled
44	External stop command	45	Auxiliary set frequency reset
46	Pre-magnetizing command terminal	47~54	Reserved
55	Motor 1 and 2 switching terminal	56	Security terminal input
57~59	Reserved	60	Emergency stop
61~73	Reserved	74	PID reference frequency pulse input (valid only for X6)
75	PID feedback frequency pulse input (valid only for X6)	76~95	Reserved

Any two terminals can not be set as the same function No. (except for the function No. 0)

0: No function

1: Terminal forward running input (FWD)

2: Terminal reverse running input (REV)

3: Terminal jog forward running input

4: Terminal jog reverse running input

The above functions 1~4 are only enabled under the terminal running command reference mode (P02.02=1); the running command and the jog command are interlocked, that is: the drive will not respond to the jog command in the running status, and vice versa.

5: Three-wire operation control

It is enabled only under the terminal running command reference mode (P02.02=1), please refer to P09.08 for the using method.

6: Multi-stage reference terminal 1

7: Multi-stage reference terminal 2

8: Multi-stage reference terminal 3
9: Multi-stage reference terminal 4

Table 6-7 Table of multi-speed running options

K_4	K_3	K_2	K_1	Frequency setting
OFF	OFF	OFF	OFF	Common running frequency
OFF	OFF	OFF	ON	Multi-stage frequency 1
OFF	OFF	ON	OFF	Multi-stage frequency 2
OFF	OFF	ON	ON	Multi-stage frequency 3
OFF	ON	OFF	OFF	Multi-stage frequency 4
OFF	ON	OFF	ON	Multi-stage frequency 5
OFF	ON	ON	OFF	Multi-stage frequency 6
OFF	ON	ON	ON	Multi-stage frequency 7
ON	OFF	OFF	OFF	Multi-stage frequency 8
ON	OFF	OFF	ON	Multi-stage frequency 9
ON	OFF	ON	OFF	Multi-stage frequency 10
ON	OFF	ON	ON	Multi-stage frequency 11
ON	ON	OFF	OFF	Multi-stage frequency 12
ON	ON	OFF	ON	Multi-stage frequency 13
ON	ON	ON	OFF	Multi-stage frequency 14
ON	ON	ON	ON	Multi-stage frequency 15

Table 6-8 Expression of multi-stage closed loop reference selection

Multi-stage closed loop terminal 4	Multi-stage closed loop terminal 3	Multi-stage closed loop terminal 2	Multi-stage closed loop terminal 1	Multi-stage closed loop reference selection
OFF	OFF	OFF	OFF	The closed loop reference is determined by P14.02.
OFF	OFF	OFF	ON	Multi-stage closed loop reference 1
OFF	OFF	ON	OFF	Multi-stage closed loop reference 2
OFF	OFF	ON	ON	Multi-stage closed loop reference 3
OFF	ON	OFF	OFF	Multi-stage closed loop reference 4
OFF	ON	OFF	ON	Multi-stage closed loop reference 5
OFF	ON	ON	OFF	Multi-stage closed loop reference 6
OFF	ON	ON	ON	Multi-stage closed loop reference 7
ON	OFF	OFF	OFF	Multi-stage closed loop reference 8

Multi-stage closed loop terminal 4	Multi-stage closed loop terminal 3	Multi-stage closed loop terminal 2	Multi-stage closed loop terminal 1	Multi-stage closed loop reference selection
ON	OFF	OFF	ON	Multi-stage closed loop reference 9
ON	OFF	ON	OFF	Multi-stage closed loop reference 10
ON	OFF	ON	ON	Multi-stage closed loop reference 11
ON	ON	OFF	OFF	Multi-stage closed loop reference 12
ON	ON	OFF	ON	Multi-stage closed loop reference 13
ON	ON	ON	OFF	Multi-stage closed loop reference 14
ON	ON	ON	ON	Multi-stage closed loop reference 15

When P13.00=0, the multi-stage reference means multi-stage frequency reference.

By combining the ON/OFF options of these function terminals, the maximum of 15-step speed running curve can be defined.

When P13.00=1, the multi-stage reference means multi-stage closed loop reference.

The multi-stage closed loop reference selection in Table 6-8 can be realized by selecting the ON/OFF combination of the multi-stage closed loop terminals 1~4.

10: Acceleration/deceleration time terminal 1

11: Acceleration/deceleration time terminal 2

When only one motor (motor 1 or motor 2) is controlled, the acceleration/deceleration time 1~4 can be selected by combining the ON/OFF status of the acceleration/deceleration terminal 1 & 2.

Table 6-9 Expression of acceleration/deceleration time selection

Terminal 2	Terminal 1	Acceleration or deceleration time selection
OFF	OFF	Acceleration time 1/ deceleration time 1
OFF	ON	Acceleration time 2/ deceleration time 2
ON	OFF	Acceleration time 3/ deceleration time 3
ON	ON	Acceleration time 4/ deceleration time 4

If the drive needs to control two motors at the same time (the terminal function is selected as 55, i.e. “Motor 1 and 2 switching terminal” function, and the terminal function is enabled), the acceleration/deceleration time 1 and 2 refer to those of motor 1, and the acceleration/deceleration time 3 and 4 refer to those of motor 2. At this time, the acceleration/deceleration terminal 1 switches two groups of acceleration/deceleration time (acceleration/deceleration time 1 and 2) for motor 1, and the acceleration/deceleration terminal 2 switches two groups of acceleration/deceleration time (acceleration/deceleration time 3 and 4) for motor 2.

12: Main set frequency pulse input (valid only for X6)

It is only valid for the input terminals X6. It is used together with P02.04=4 to serve as the reference of the main frequency. The relation between the input signal pulse frequency and the set frequency can be adjusted through the curve of Group P10.

13: Auxiliary set frequency pulse input (valid only for X6)

It is only valid for the input terminals X6. It is used together with P02.04=4 to serve as the reference of the auxiliary frequency. The relation between the input signal pulse frequency and the set frequency can be adjusted through the curve of Group P10.

14: Frequency increase command (UP)

15: Frequency decrease command (DN)

The remote control of the frequency increase or decrease is realized through control terminals rather than operation panel. It is enabled when P02.04=1 (common operation) or P02.07=2 (as auxiliary frequency). The acceleration/ deceleration rate is set by P09.09.

16: External equipment fault normally open input

17: External equipment fault normally closed input

The fault signal of external equipments can be input through this terminal for monitoring fault of external equipments by the drive. The drive will display “Er.EFT” (i.e. external equipment fault alarm) upon receiving the fault signal of external equipments; and such signals can adopt either the input mode of normally open or normally closed.

18: External interrupt normally open contact input

19: External interrupt normally closed contact input

The drive will lock the output and run with zero frequency when receiving the external interrupt signal during running. Once the external interrupt signal is removed, the drive will start in the speed tracking mode and resume the running.

20: Reference frequency source switching command

The reference frequency source can realize the reference mode of the frequency source through this terminal function and the function code of P02.10.

21: Reserved

22: External reset input

Realizing the fault reset. The STOP/REST key on the operation panel and the host device command can be used to reset the fault as well.

23: Coast to stop input (FRS)

In the running status, once this terminal function is enabled, the drive will coast to stop immediately.

24: Acceleration/deceleration disable command

If this function terminal is enabled, the running frequency will remain the same, except for the stop command.

25: Stop DC braking input command

Once the drive received the stop command, when the running frequency is lower than the stop DC braking frequency P08.12, the drive will start the DC braking. The braking current is set by P08.14 and

the braking time is selected between the terminal function retention time and the stop DC braking time P08.15, whichever is longer.

26: Simple PLC pause command

It is used to realize the pause control of PLC process during running. The drive will run with zero frequency and the PLC running will not be timed when this terminal is enabled; and the drive will start in the speed tracking mode and continue the PLC running when this terminal is disabled. Please refer to the function description in Group P13.16~P13.46 for directions.

27: Reserved

28: Clearing the PLC stop memory

If the drive stops under the PLC running mode, when this function terminal is enabled, the PLC running stage, running time, and running frequency information stored in the PLC upon the drive stop will be cleared. For details, please refer to the function description in Group P13.16~P13.46.

29: PID Closed loop disabled

When this function is enabled, the PID output will be disabled and the PID is forced by the drive to output with zero frequency.

30: PID closed loop soft-start disabled

When the input terminal is closed, it is used to disable P14.03 (PID command acceleration/deceleration time). When the input terminal is open, it will perform the ON/OFF command of the acceleration/deceleration time set by P14.03 (PID command acceleration/deceleration time). For details, please refer to the “PID control block diagram”.

31: PID integral retention

When the input terminal is closed, the integral value of PID control will be maintained forcedly. When the input terminal is open, the PID control will restart the integral. For details, please refer to the “PID control block diagram”.

32: PID integral clearing

The integral value of PID control will be reset to be 0 and kept when the input terminal is closed. For details, please refer to the “PID control block diagram”.

33: Switching PID adjustment features

It refers to the integral value of PID control when the input terminal is closed. For details, please refer to the “PID control block diagram”.

Table 6-10 Expression of frequency reference channel selection

Selecting terminal 3 as main frequency reference channel	Selecting terminal 2 as main frequency reference channel	Selecting terminal 1 as main frequency reference channel	Main frequency reference channel selection
OFF	OFF	OFF	Adopt the settings of P02.04
OFF	OFF	ON	Operation panel ∧∨ reference
OFF	ON	OFF	Terminal UP/DOWN reference
OFF	ON	ON	AI analog reference
ON	OFF	OFF	Terminal PULSE reference
ON	OFF	ON	Simple PLC

ON	ON	OFF	Process closed loop PID
ON	ON	ON	Multi-speed

34: Main reference frequency source selection 1

35: Main reference frequency source selection 2

36: Main reference frequency source selection 3

The switching of the frequency reference channels in Table 6-10 can be realized by selecting the ON/OFF combination of terminal 1, 2, and 3 through the frequency reference channels. It is enabled when the relation between the terminal switching and the function code P02.04 is “later comer”.

37: Switching main reference frequency to AI

The main set frequency channel will be switched to AI reference when this function terminal is enabled. The choosing of AI shall be set in the AI function of Group P10.01. The frequency reference channel will be restored when this function terminal is disabled.

38: Command source selection 1

39: Command source selection 2

The running command channel selection in Table 6-11 can be realized by selecting the ON/OFF combination of the command source selection terminals 1 and 2.

Table 6-11 Running command channel selection

Selecting terminal 2 as command source	Selecting terminal 1 as command source	Running command channel
OFF	OFF	Running command channel maintained
OFF	ON	Operation panel running command channel
ON	OFF	Terminal running command channel
ON	ON	Serial port running command channel

40: Switching command to terminal

When this function terminal is enabled, the running command channel will be switched to the terminal running command channel. When this function terminal is disabled, the running command channel will return to the original state.

41: FWD disabled

42: REV disabled

FWD disabled: If this terminal is enabled during the forward running, the drive will coast to stop. If this terminal is enabled before the forward running, the drive will enter the zero-frequency running state. The reverse running will not be affected.

REV disabled: Similarly.

43: Drive running disabled

The drive will coast to stop once this function code is enabled; the drive will start normally once this function code is disabled.

44: External stop command

In the running state, once this terminal function is enabled, the drive will stop according to the stop mode.

45: Auxiliary reference frequency reset

It is only valid for the digital auxiliary frequency (P02.07=1, 2,3). When this function terminal is enabled, the auxiliary frequency reference will be cleared, and the set frequency is completely determined by the main reference.

46: Pre-magnetizing command terminal (Reserved)

47~54: Reserved

55: Motor 1 and 2 switching terminal

When this terminal function is enabled, the control switching between two motors can be realized. The drive controls two motors at the same time and can switch between them through this function code. The acceleration/deceleration time of motor 1 can be set with the acceleration/deceleration time 1 and 2, and that of motor 2can be set with the acceleration/deceleration time 3 and 4.

56: Security terminal input

57~59: Reserved

60: Emergency stop

When this terminal function is enabled, the drive will stop as soon as possible. It will automatically determine the deceleration time according to the load torque to stop as soon as possible.

61~73: Reserved

74: PID reference pulse input

It is only valid for the input terminals X6. It is used together with P14.00=4 to serve as the reference of PID. The relation between the input signal pulse frequency and the set frequency can be adjusted through the curve of Group P10.

75: PID feedback pulse input

It is only valid for the input terminals X6. It is used together with P14.01=3 to serve as the reference of PID feedback. The relation between the input signal pulse frequency and the set frequency can be adjusted through the curve of Group P10.

P09.06~P09.07	Reserved	0
P09.08	FWD/REV running mode setting	0~3 (0)

This parameter defines four different modes for controlling the drive running through the external terminal.

0: Two-wire running mode 1

K1	K2	Running command
0	0	Stop
1	0	FWD
0	1	REV
1	1	Stop

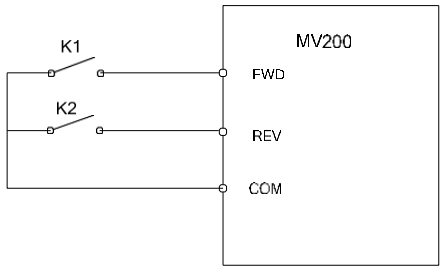

Fig.6-18 Two-wire running mode 1

1: Two-wire running mode 2

K1	K2	Running command
0	0	Stop
0	1	Stop
1	0	FWD
1	1	REV

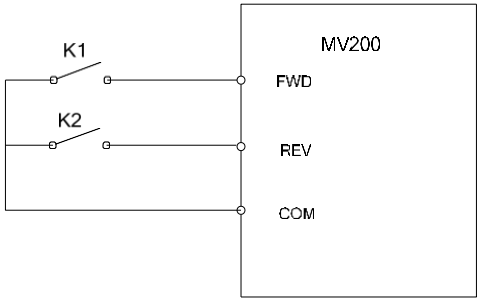

Fig.6-19 Two-wire running mode 2

2: Three-wire running mode 1

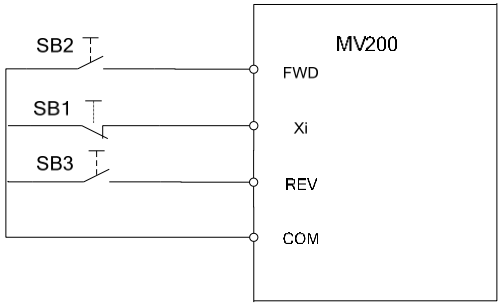

Fig.6-20 Three-wire running mode 1

Where:

SB1: Stop key

SB2: FWD key

SB3: REV key

Xi is the multifunctional input terminal of X1~X6. Its corresponding terminal function shall be defined as function No. 5 “three-wire running control”.

3: Three-wire running mode 2

K	Running direction selection
0	FWD
1	REV

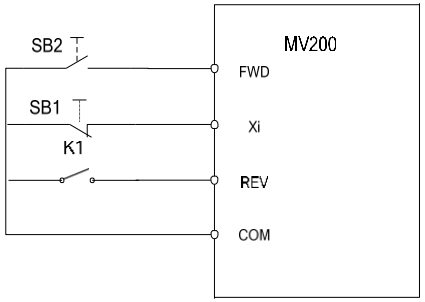

Fig.6-21 Three-wire running mode 2

Where:

SB1: Stop key

SB2: Run key

Xi is the multifunctional input terminal of X1~X6. Its corresponding terminal function shall be defined as function No. 5 “three-wire running control”.

P09.09	Terminal UP/DN acceleration/deceleration rate	0.01~99.99Hz/s(1.00)

This function code is used to adjust the change rate of terminal UP/DOWN when setting the frequency.

P09.10	Terminal filtering time	0~500ms (10ms)

The interference immunity of terminals X1~X6 can be improved by properly increasing the value of P09.10. the longer the filtering time of the terminal is, the longer the action delay time for the terminal will be.

Note

When terminal X6 is used as the common digital input terminal, this filtering time (P09.10) is enabled; when terminal X6 is used as the high-speed pulse input terminal, the filtering time is P09.14.

P09.11	Maximum input pulse frequency of X6	0.1~100.0kHz (10.0 kHz)

When the digital input terminal X6 is used as the high-speed pulse input terminal, the maximum input pulse frequency can be determined by this function code.

P09.12	Reserved	0
P09.13	Pulse reference central point selection	0~2（0）

This function code defines three different central point modes when terminals X6 is used as the pulse input.

Unit place: X6 central point selection

0: No central point. As shown in Fig.6-22.

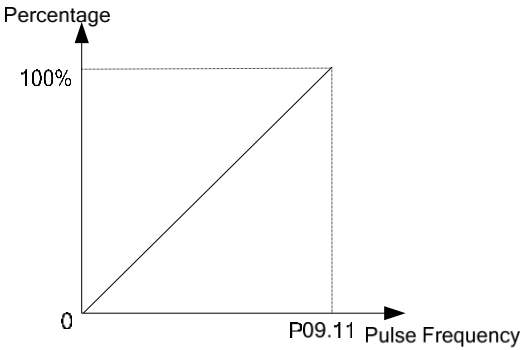

Fig.6-22 No central point mode

The values corresponding to the pulse input frequency are all positive.

1: Central point mode 1

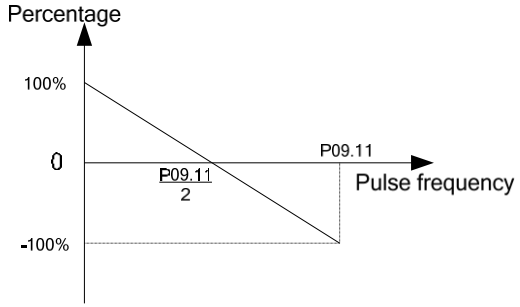

Fig.6-23 Central point mode 1

The pulse input has a central point. The frequency at the central point is half of the maximum pulse input frequency P09.11. When the input pulse frequency is lower than the central point frequency, the corresponding values are positive.

2: Central point mode 2

The pulse input has a central point. The frequency at the central point is half of the maximum pulse input frequency P09.11. When the input pulse frequency is higher than the central point frequency, the corresponding values are positive.

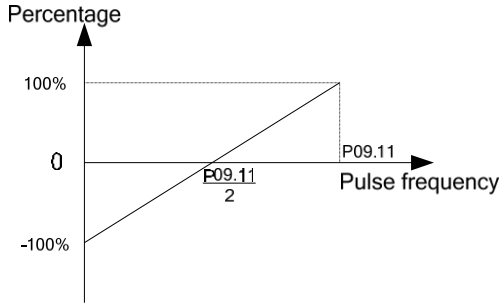

Fig.6-24 Central point mode 2

P09.14	Input pulse filtering time	0.00~10.00s (0.05s)

When the terminal X6 is used as the high-speed pulse input terminal, this function code defines the filtering time of the input pulse. The longer the filtering time is, the slower the reference pulse frequency change rate will be.

P09.15	Input terminal valid status setting	00~3FH (00)

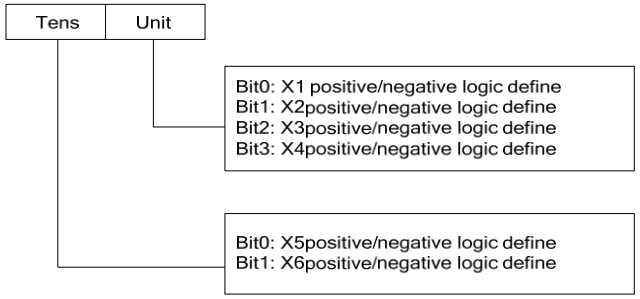

Fig.6-25 Terminal positive/negative logic setting

This function code defines the positive/negative logic of the input terminal.

Positive logic: enabled when the Xi terminal is connected to the corresponding common end, disabled when the terminal is disconnected;

Negative logic: disabled when the Xi terminal is connected to the corresponding common end, enabled when the terminal is disconnected;

When 0 is selected for the BIT, it indicates the positive logic. When 1 is selected, it indicates the negative logic.

For example:

If you want to set X1~X4 as positive logic and set X5~X6 as negative logic, make the following setting:

Set the logic state of X4~X1 as 0000, the corresponding hexadecimal value as 0, and then the LED will display 0 at the unit place. Set the logic state of X6~X5 as 11, the corresponding hexadecimal value as 3, and then the LED will display 3 at the tens place.

P09.16	Virtual input terminal setting	00~3FH (00)

This function code is used to set the enabled state of the host device virtual input terminal. For the detailed setting method, please refer to the description of P09.15.

P09.17	Output selection of Y1	0~1 (0)

0: Common open collector output

1: High-speed pulse output

P09.18	Open collector output terminal Y1	0~44 (0)
P09.19	Open collector output terminal Y2	0~44 (1)
P09.20	Relay RO1 output function selection	0~44 (15)

Y2 and the relay terminal can be defined as the multi-functional digital output; in addition, Y1 can also be used as the high-speed pulse output (0~50kHz) terminal. When Y1 terminal is used as the high-speed pulse output terminal, please refer to relevant functions of P09.29.

Table of function definition of the multi-functional digital output:

Table 6-12 Function definition of the multi-functional digital output

Item	Function	Item	Function
0	Drive in running state signal (RUN)	1	Frequency arrival signal (FAR)
2	Speed non-zero signal	3	Frequency level detection signal (FDT1)
4	Frequency level detection signal (FDT2)	5	Overload detection signal (OL)
6	Lockout for undervoltage (LU)	7	External fault stop (EXT)
8	Frequency upper limit (FHL)	9	Frequency lower limit (FLL)
10	Drive running at zero-speed	11	Simple PLC stage running completion indication
12	PLC cycle completion indication	13	Reserved
14	Reserved	15	Drive ready for running (RDY)
16	Drive fault	17	Host device switch signal
18~33	Reserved	34	Drive FWD/REV indication
35	Motor 1 and 2 indication	36	Bus card ON/OFF signal
37~42	Reserved	43	PID feedback loss
44	PID feedback exceeding limit		

0: Drive in running state signal (RUN)

When the drive is running, the relevant indication signal is output.

1: Frequency arrival signal (FAR)

Refer to the function description of P09.24.

2: Speed non-zero signal

When the drive is running, and the speed is higher than the P08.07 “stop speed”, the relevant indication signal is output. The speed non-zero detection mode is set by P08.09 “stop speed detection mode”.

Note:

The zero speed detection is enabled in all the control modes.

3: Frequency level detection signal (FDT1)

Refer to the function description of P09.25~P09.26.

4: Frequency level detection signal (FDT2)

Refer to the function description of P09.27~P09.28.

5: Overload detection signal (OL)

When the drive output current exceeds the overload pre-alarm detection level, and the retention time exceeds the overload pre-alarm detection time, the relevant indication signal will be output. It is usually used for the overload pre-alarm. Refer to the description of P97.04~P97.05.

6: Lockout for under-voltage (LU)

When the DC bus voltage is lower than the under-voltage level, the relevant indication signal will be output, and the LED displays “-LU-”.

7: External fault stop (EXT)

When the drive has external fault tripping alarm (Er.EFT), the relevant indication signal will be output.

8: Frequency upper limit (FHL)

When the set frequency ≥ frequency upper limit and the running frequency reaches the frequency upper limit, the relevant indication signal will be output.

9: Frequency lower limit (FLL)

When the set frequency ≤ frequency lower limit and the running frequency reaches the frequency lower limit, the relevant indication signal will be output.

10: Drive running at zero-speed

When the drive is running at zero speed, the relevant indication signal is output.

11: Simple PLC stage running completion indication

When the current stage of simple PLC running is completed, the relevant indication signal will be output (single pulse signal, width: 500ms).

12: PLC cycle completion indication

When the simple PLC completes an operation cycle, the relevant indication signal will be output (single pulse signal, width: 500ms).

13~14: Reserved

15: Drive ready for running

If the signal output is enabled, it means that the drive does not have any fault, the bus voltage is normal, the “drive running disabled” terminal is disabled, and it can receive the start command.

16: Drive fault

When the drive has any fault, the relevant indication signal will be output.

17: Host device switch signal

The output signals of Y1, Y2 or RO1 are directly controlled via the serial port. The output is also affected by P09.22.

18~33: Reserved

34: Drive FWD/REV indication terminal

Corresponding indication signal will be output according to the actual running direction of the drive.

35: Motor 1 and 2 indication

Corresponding indication signal will be output according to the currently selected motor.

36: Bus card ON/OFF signal

The digital terminal signal adopts the virtual reference of the bus card.

37~42: Reserved

43: PID feedback loss

When the feedback signal is less than the detection value set by P14.26 and its time exceeds the time set by P14.27, then PID feedback is considered as “loss”.

44: PID feedback exceeding limit

When the feedback signal is greater than the detection value set by P14.28 and its time exceeds the time set by P14.29, then PID feedback is considered as “exceeding limit”.

Note:

Only the following function No. will be shown in the quick menu: 0, 1, 3, 4, 5, 6, 7, 8, 9, 15, 16.

P09.21	Reserved	0
P09.22	Output terminal enabled status setting	0~7 (0)

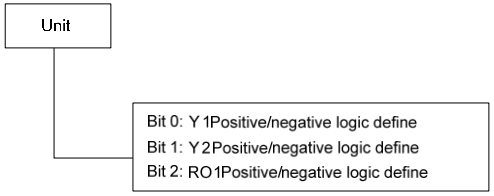

Fig.6-26 Output terminal enabled status setting

This function code defines the positive/negative logic of the output terminal.

Positive logic: enabled when the output terminal is connected to the corresponding common end, disabled when the terminal is disconnected;

Negative logic: disabled when the output terminal is connected to the corresponding common end, enabled when the terminal is disconnected.

P09.23	Relay RO1 output delay	0.1~10.0s (0.1s)

This function code defines the time delay from the state change of relay RO1 to its output change.

P09.24	Frequency arrival (FAR) detection width	0.00~3000.00Hz(2.50Hz)

This function code is used to detect the deviation between the output frequency and the set frequency. If the output terminal function is set as “1: Frequency arrival signal”, when the deviation between the output

frequency and the set frequency is within the range set by this function code, the relevant indication signal will be output, as shown in Fig. 6-27.

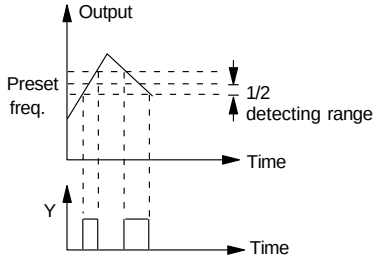

Fig.6-27 Schematic diagram for frequency arrival signal output

P09.25	FDT 1 level upper limit	P09.26~P02.16 (50.00Hz)
P09.26	FDT 1 level lower limit	0.00~P09.25 (49.00Hz)
P09.27	FDT 2 level upper limit	P09.28~P02.16 (25.00Hz)
P09.28	FDT 2 level lower limit	0.00~P09.27 (24.00Hz)

P09.25~P09.26 are the complementary definitions of the No.3 function in P09.21, and P09.27~P09.28 are the complementary definitions of the No.4 function in P09.21. They have the same use method. The following will take P09.25~P09.26 for example.

When the output frequency exceeds the set frequency P09.25 (FDT1 level upper limit), the relevant indication signal will be output, until the output frequency is reduced to lower than certain frequency of the FDT1 level (FDT1 level lower limit), As shown in Fig. 6-28.

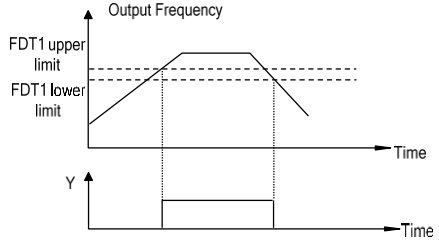

Fig.6-28 Schematic diagram for frequency level detection

P09.29	DO terminal output	0~19 (0)

The DO pulse frequency output: 0 to maximum output pulse frequency.

The linear correspondence relationship between the DO output and the indication range is as shown in Table 6-13.

Table 6-13 Function definition of the multi-functional digital output

Item	Function	Indication range
0	No function	None
1	Output frequency	0~Maximum output frequency
2	Set frequency	0~Maximum output frequency
3	Output current Iei	0 ~ 200% of the rated current of the drive

Item	Function	Indication range
4	Output current Iem	0~200% of the rated current of the motor
5	Output torque	0~300% of the rated torque of the motor
6	Output torque current	0~300% of the torque current
7	Rotating speed of motor (V/F control disabled)	0~Maximum rotating speed
8	Output voltage	0~150% of the rated voltage of the drive
9	AI1 voltage	-10V~10V/4~20mA
10	AI2 voltage	-10V~10V/4~20mA
11	Reserved	
12	Output power	0~200% of the rated power
13~16	Reserved	
17	HOST device expansion function 1	0～65535
18	Reserved	
19	Percentage of bus card	0～65535

P09.30	Maximum output pulse frequency	0.1~50.0kHz (10.0 kHz)

This function code defines the maximum output frequency when the terminal Y1 is used as the DO high-speed pulse output terminal.

P09.31	Pulse output central point selection	0~2 (0)

This function code defines three different central point modes when the terminal Y1 is used as the DO high-speed pulse output terminal.

0: No central point. As shown in Fig.6-29.

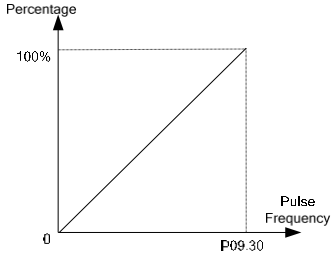

Fig.6-29 No central point mode

The values corresponding to the pulse output frequency are all positive.

1: Central point mode 1. As shown in Fig.6-30.

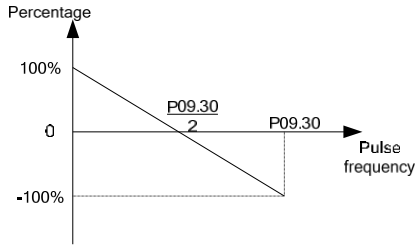

Fig.6-30 Central point mode 1

The pulse output has a central point. The frequency at the central point is half of the maximum pulse output frequency P09.30. When the output pulse frequency is lower than the central point frequency, the corresponding values are positive.

2: Central point mode 2

The pulse output has a central point. The frequency at the central point is half of the maximum pulse output frequency P09.30. When the output pulse frequency is higher than the central point frequency, the corresponding values are positive.

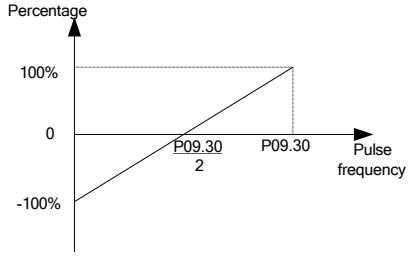

Fig.6-31 Central point mode 2

P09.32	Pulse output filtering time	0.00~10.00s (0.05s)

This function code defines the filtering time of the output pulse. The longer the filtering time is, the slower the output pulse frequency change rate will be.

P09.33	Flux detection value	10.0~100.0%(100.0%)

It is used together with the No. 20 function of the digital output terminal.

P09.34	Zero-speed threshold	0.0~100.0% (1.0%)

This function code is relative to the maximum output frequency P02.15. It is used together with No. 10 function of the digital output terminal.

6.8 Analog input/output terminal parameters (Group P10)

The analog input AI1~AI2 and pulse input can be used as different channel references. For the function selection of the analog input channel, please refer to the setting of the function code of Group P10.01. For the function selection of the pulse input, please refer to the setting of the X6 terminal input functions. For example, when AI1, AI2 or the pulse frequency (PULSE) input is selected as the frequency reference channel, the relationship between the reference frequency and the set frequency is as shown in Fig. 6-32 (take AI1 as the main frequency reference channel):



Fig.6-32 The relationship between the reference channel input and the set frequency

After the analog reference signal is filtered, the relationship with the set frequency is determined by the linear 1, linear 2 or curve 1. The linear 1 is defined by P10.06~P10.09. The linear 2 is defined by P10.10~P10.13 and the curve 1 is defined by P10.14~P10.21. Take the set frequency as an example, both can realize the positive action and reverse action independently, as shown in Fig. 6-33.

The Fig. 6-33 shows the correspondence when the inflection point is set on the curve determined by the maximum and minimum reference point. If the inflection point is set on other positions, it has other flexible correspondence, please refer to the example below for details.

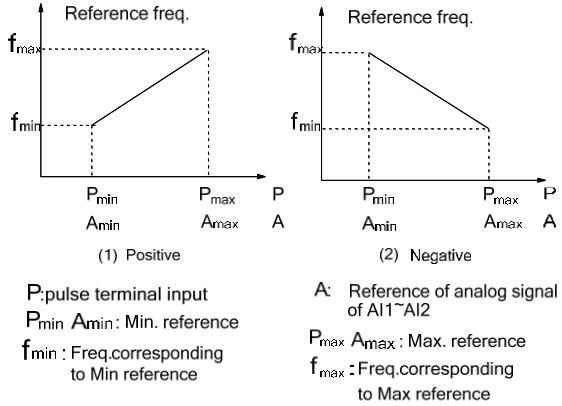

Fig.6-33 Analog output frequency feature curve

When the analog input A is 100%, it corresponds to 10V or 20mA; when the pulse frequency P is 100%, it corresponds to the maximum input pulse frequency defined by P09.11 or P09.12.

P10.00	Analog input type selection	00～11(00)

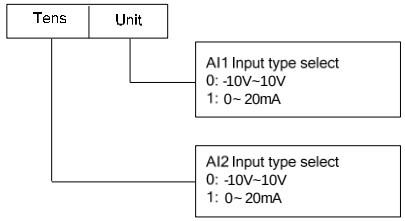

Fig.6-34 Analog input type selection

This function code is used for selecting the analog input type and range of AI1 and AI2.

P10.01	Analog AI function selection	00~EEH (00H)

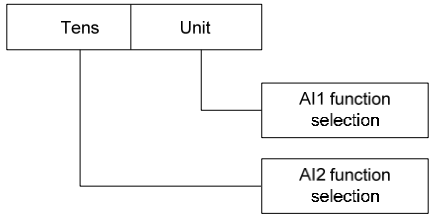

Fig.6-35 Analog input function selection

AI function selections are as follows:

0: No function

1: Main set frequency reference (bipolar)

When this function is selected, it shall be used together with the P02.04 function code setting. When used as the voltage input, and analog input polarity will affect the drive running direction: When the analog input is positive, the drive will be in forward operation, otherwise, it will be in reverse running. The maximum value of the analog input (10V/20mA) corresponds to the maximum output frequency of the drive.

2: Auxiliary set frequency reference

When this function is selected, it shall be used together with the P02.07 function code setting. When used as the voltage input, and analog input polarity will affect the auxiliary frequency polarity: When the analog input is positive, the auxiliary frequency will be positive, otherwise, it will be negative. The maximum value of the analog input (10V/20mA) corresponds to the maximum output frequency of the drive.

3~8: Reserved

9: Main set frequency reference (unipolar)

The meaning of this function is the same as 1, the only difference lies in that the analog input polarity does not affect the running direction of the drive, which is determined by P02.03 or the forward and reverse terminals or communication setting.

A: Auxiliary set frequency reference (unipolar)

The meaning of this function is the same as 2, the only difference lies in that the analog input polarity does not affect the direction of auxiliary frequency. When the auxiliary frequency can be used as the main

reference switching frequency, its running direction is determined by P02.03 or the forward and reverse terminals or communication setting.

B: Motor temperature detection

The motor temperature resistance switches into the analog voltage input value by hardware processing as the detection value of the motor temperature.

C: V/F output voltage offset

When the analog input is the voltage signal, and the analog input terminal function is the output voltage offset, the corresponding output voltage offset is as shown in Fig.6-36.

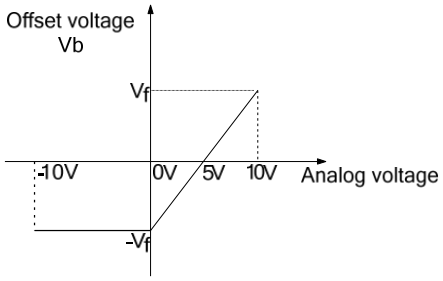

Fig.6-36 Output voltage offset

Assuming that the output voltage corresponding to the set frequency in the V/F curve is V_f, the relation between the input analog signal and the offset voltage is as follows:

The corresponding offset voltage of the -10V~0V/4mA analog input V_{AI} is $V_b = -V_f$.

The corresponding offset voltage of the 10V/20mA analog input V_{AI} is $V_b = V_f$.

The drive output voltage $V_O=V_f+V_b$.

D: Output voltage

When this function is enabled under V/F mode, the drive output voltage VO and the output frequency are mutually independent. The drive output voltage is not restricted by the V/F feature curve of Group P07, but is determined by the analog input signal, as shown in Fig.6-37.

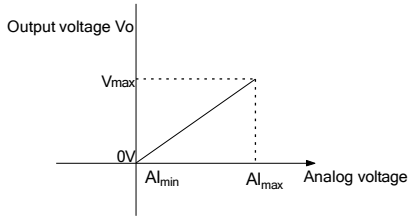

Fig.6-37 Output voltage curve

The horizontal coordinate in the figure is the adjusted analog input signal, the vertical coordinate is the drive output voltage value. When the input analog voltage is less than 0, the output voltage is 0.

E: Reserved

P10.02	AI1 filtering time	0.000~10.000s(0.010s)
P10.03	AI2 filtering time	0.000~10.000s(0.010s)

P10.02~P10.03 defines the channel filtering time constant for the filtering of the input signal. The longer the filtering time is, the stronger the immunity becomes, but the slower the response will become. The shorter the filtering time is, the faster the response becomes, but the weaker the immunity will become.

P10.04	Reserved	0
P10.05	Analog curve selection	0~2022H(0010H)

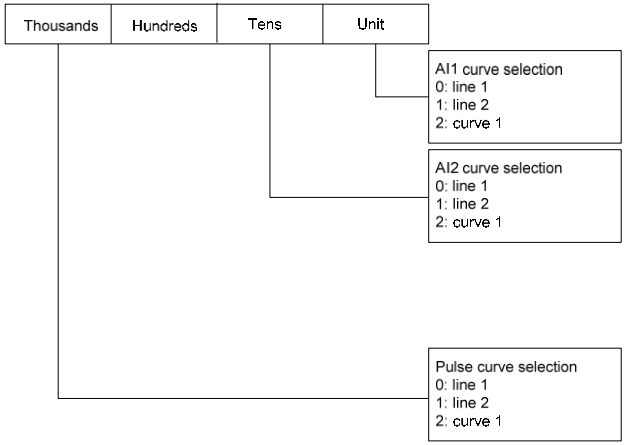

Fig.6-38 Analog and pulse curve selection

P10.05 is used for selecting the analog and pulse curve.

P10.06	Maximum reference of line 1	P10.08~100.0%(100.0%)
P10.07	Actual value corresponding to the maximum reference of line 1	0.0~300.0% (100.0%)
P10.08	Minimum reference of line 1	0.0%~P10.06 (0.0%)
P10.09	Actual value corresponding to the minimum reference of line 1	0.0~300.0% (0.0%)
P10.10	Maximum reference of line 2	P10.12~100.0% (100.0%)
P10.11	Actual value corresponding to the maximum reference of line 2	0.0~300.0% (100.0%)
P10.12	Minimum reference of line 2	0.0~P10.10 (0.0%)
P10.13	Actual value corresponding to the minimum reference of line 2	0.0~300.0% (0.0%)
P10.14	Maximum reference of curve 1	P10.16~100.0%(100.0%)
P10.15	Actual value corresponding to the maximum reference of curve 1	0.0~300.0% (100.0%)
P10.16	Inflection point 2 of the curve 1 reference	P10.18~P10.14(100.0%)
P10.17	Actual value corresponds to the inflection point 2 of the curve 1	0.0~300.0% (100.0%)
P10.18	Inflection point 1 of the curve 1 reference	P10.20~P10.16 (0.0%)
P10.19	Actual value corresponds to the inflection point 1 of the curve 1	0.0~300.0% (0.0%)

P10.20	Minimum reference of curve 1	0.0%~P10.18 (0.0%)
P10.21	Actual value corresponding to the minimum reference of curve 1	0.0~300.0% (0.0%)

Where the value range of P10.07, P10.09, P10.11, P10.13, P10.15, P10.17, P10.19 and P10.21 is as follows: Take as the frequency reference, its value range is 0.0~100.0％Fmax; 0.0~300.0％Te for the torque and 0.0~100.0％Φe for the magnetic flux.

For example, the demand analysis is as follows:

1 Setting the set frequency with the pulse signal input by the terminal;

2 Input signal 1kHz~20kHz;

3 The 1kHz, 8kHz, 12kHz and 20kHz input signal shall correspond to the set frequency of 50Hz, 10Hz, 40Hz and 5Hz respectively.

Based on the above requirements, the parameter settings are as below:

P02.04=4, adopting the terminal PULSE reference as the main frequency reference channel.

1） P09.07=12, input the pulse signal from X6 terminal;

2 P10.05=2000, select the curve 1;

3 P09.11=20.0kHz, set the maximum pulse input frequency as 20kHz;

4 P10.14=20÷20×100％=100.0％, set the percentage of the maximum reference of curve 1 (20kHz) relative to 20kHz (P09.11);

5 P10.15=5.00Hz÷P02.15 x100％, set the corresponding set frequency percentage of the maximum reference (20kHz pulse signal);

6 P10.16=12÷20×100％=60.0％, set the percentage of the inflection point 2 of the curve 1 reference (12kHz) relative to 20kHz (P09.11);

7 P10.17=40.00Hz÷P02.15 x100％, set the corresponding set frequency percentage of the inflection point 2 of the curve 1 reference (12kHz pulse signal);

8 P10.18=8÷20×100％=40.0％, set the percentage of the inflection point 1 of the curve 1 reference (8kHz) relative to 20kHz (P09.11);

9 P10.19=10.00Hz÷P02.15 x100％, set the corresponding set frequency percentage of the inflection point 1 of the curve 1 reference (8kHz pulse signal);

10 P10.20=1÷20×100％=5.0％, set the percentage of the minimum reference of curve 2 (1kHz) relative to 20kHz (P14.13);

11 P10.21=50.00Hz÷P02.15 x100％, set the corresponding set frequency percentage of the minimum reference (1kHz pulse signal);

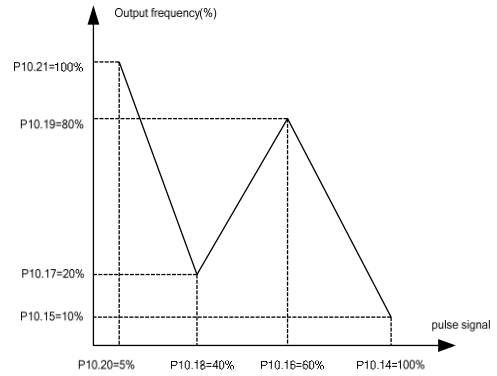

Fig.6-39 Example of parameter setting for pulse signal input

P10.22	Analog output type	0~1H (0)

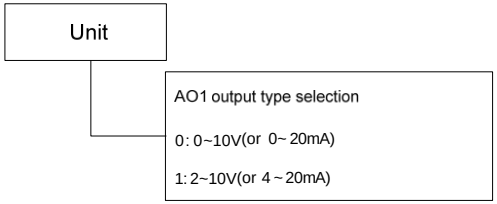

Fig.6-40 Analog output type selection

This function code is used for selecting the analog output range of AO1. For the voltage or current output, it shall be determined by the jumper on the terminal board. For details, please refer to the description of the terminal board.

P10.23	Analog output terminal AO1 function	0~26 (00)
P10.24	AO1 gain	0.0~200.0%(100.0%)
P10.25	AO1zero offset correction	-100.0%~100.0% (0.0%)

The linear correspondence relationship between the AO1 output and the indication range is as shown in Table 6-14.

Table 6-14 Analog output terminal indication

Item	Function	Indication range
0	Output frequency	0~Maximum output frequency
1	Set frequency	0~Maximum output frequency
2	Set frequency (after acceleration/ deceleration)	0~Maximum output frequency
3	Reserved	
4	Output current	0 ~ 200% of the rated current of the drive
5	Output current	0 ~ 200% of the rated current of the

Item	Function	Indication range
		motor
6	Output torque	0 ~ 300% of the rated torque of the motor
7	Output torque current	0 ~ 300% of the rated torque of the motor
8	Output voltage	0 ~ 120% of the rated voltage of the drive
9	Bus voltage	0~800V
10	AI1	0~Maximum analog input
11	AI2	0~Maximum analog input
12	Reserved	
13	Output power	0 ~ 200% of the rated power of the motor
14	Percentage of host device	0～4095
15~23	Reserved	
24	Motor rotating speed (bipolar)	Negative maximum output frequency ~ maximum output frequency
25	Reserved	
26	Percentage of bus card	0~4095

Note

1.When the function corresponding to the AO output is unipolar, the indication value corresponding to the minimum output has the minimum absolute value, while the indication value corresponding to the maximum output has the maximum absolute value. When the function is bipolar, the indication value corresponding to the minimum output is the smallest, while the indication value corresponding to the maximum output is the biggest.

2. When the AO output is current, it is suggested that the external equivalent resistance not exceed 400ohm.

For the AO1 analog output, if you need to change the display range or correct the meter error, you can adjust the output gains to achieve the goal.

The analog output zero offset takes 100% as the maximum output (10V or 20mA), and adopts the percentage as the unit to set the up and down translation. Taking the output voltage as an example, the adjustment relations before and after the adjustment are as shown as below:

AO1 output value = output gain x value before adjustment + zero offset correction x 10V

The curves for the relation between analog output and gains, between analog output and zero offset correction are as shown in Fig.6-41 and Fig.6-42.

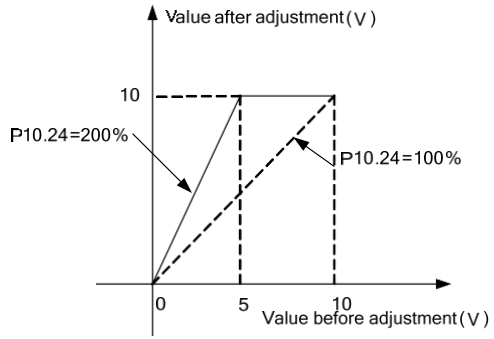

Fig.6-41 Relation curve between analog output and gains

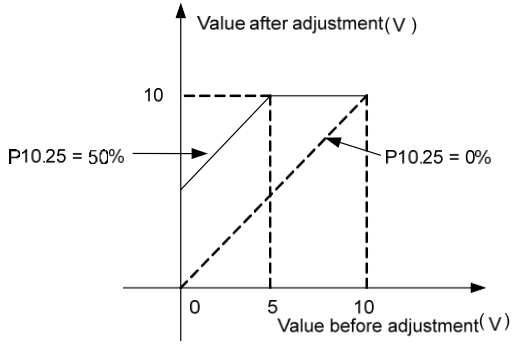

Fig.6-42 Relation curve between analog output and zero offset

Note

The output gain and zero offset correction function codes will real time affect the analog output during the change.

P10.26～P10.28	Reserved	0
P10.29	AI1 zero offset correction	-1.00~1.00V (0.00V)
P10.30	AI2 zero offset correction	-1.00~1.00V (0.00V)

P10.29 and P10.30 are used for correcting the zero offset of analog inputs AI1 and AI2.

Take AI1as an example to introduce zero offset correction.

AI1 is used as voltage type signal, when the input signal is 0V, observe AI1 value P01.20, if P01.20 is non-zero value at this time, it indicates that AI1 has zero offset, you need to enter the value which has equal absolute value but opposite sign with P01.20 in P10.29. If P01.20 = 0.01V, then set P10.29 = -0.01V.

P10.31	Reserved	0

6.9 Auxiliary function parameters (Group P11)

P11.00	Acceleration/deceleration mode selection	0~1 (0)

0: Linear acceleration/deceleration

The output frequency is decreased or increased according to constant slope, as shown in Fig. 6-43.

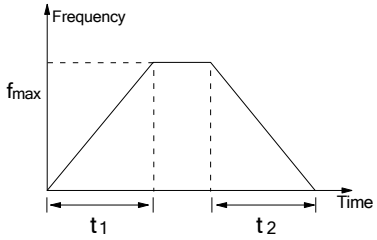

Fig.6-43 Linear acceleration/deceleration

1: S curve acceleration/deceleration

The output frequency is decreased or increased according to the S curve, as shown in Fig. 6-44.

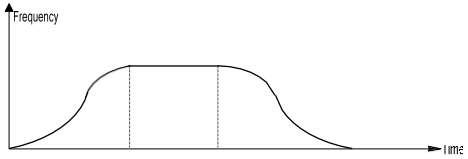

Fig.6-44 S curve acceleration/deceleration

The speed setting value is in the S curve status at the beginning of the acceleration and when it reaches the desired speed, and at the beginning of the deceleration and when it reaches the desired speed. Thus, the acceleration and deceleration can be smooth and there is less impact. The S curve acceleration/deceleration mode is applicable to the start and stop of carrier of transportation and transmission, such as the elevator, conveyor, etc.

P11.01	Acceleration/deceleration time unit	0~2 (1)

0: 0.1s

1: s

2: min

This function is used for defining the time unit for all the acceleration/deceleration operations, except for the jog operation.

P11.02	Acceleration time 2	0.0~3600.0 (6.0)
P11.03	Deceleration time 2	0.0~3600.0 (6.0)
P11.04	Acceleration time 3	0.0~3600.0 (6.0)

P11.05	Deceleration time 3	0.0~3600.0 (6.0)
P11.06	Acceleration time 4	0.0~3600.0 (6.0)
P11.07	Deceleration time 4	0.0~3600.0 (6.0)

The acceleration time means the time needed for the drive to accelerate from 0Hz to the maximum output frequency (P02.15), as t_1 shown in Fig. 6-43. The deceleration time means the time needed for the drive to decelerate from the maximum output frequency (P02.15) to 0Hz, as t_2 shown in Fig. 6-43.

MV200 series drive has four acceleration/deceleration time settings in total. The acceleration/deceleration time (1~4) of the drive in the operation can be selected by different combinations of control terminals. Please refer to the definition on functions of the acceleration/deceleration time terminal in P09.00~P09.05. They can be also defined as the acceleration/deceleration time for the running frequency switch between various stages when the drive is running in the simple PLC mode. Please refer to the description in P13 parameter group.

Note

The time unit (minute, second) of the acceleration/deceleration time 1~4 can be selected via P11.01 and the default leave-factory unit is second.

P11.08	S curve acceleration	10.00~600.00Hz/s(25.00)
P11.09	Fast acceleration at start segment of S curve	0.20~600.00Hz/s2 (12.50)
P11.10	Fast acceleration at end segment of S curve	0.20~600.00Hz/s2 (20.00)
P11.11	S curve deceleration	10.00~600.00Hz/s (25.00)
P11.12	Fast deceleration at start segment of S curve	0.20~600.00Hz/s2 (20.00)
P11.13	Fast deceleration at end segment of S curve	0.20~600.00Hz/s2 (12.50)

P11.08~P11.13 set S curve, and the setting of S curve can be divided into acceleration, fast acceleration (jerk) and deceleration and fast deceleration (decreasing the deceleration), as shown in Fig.6-45.

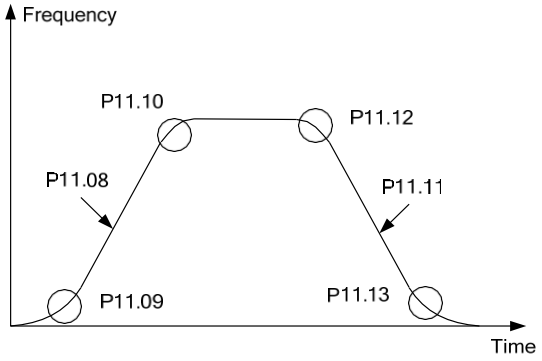

Fig.6-45 Schematic diagram of curve parameter

Note

1. The acceleration and deceleration of the S curve can be adjusted at your disposal.
2.In the acceleration section, the fast acceleration in start segment and end segment can be adjusted at your disposal.
3.In the deceleration section, the fast deceleration in start segment and end segment can be adjusted at your disposal.

The schematic diagram of adjusting the S curve is as shown in Fig. 6-46. The above figure is the schematic diagram of adjusting the S curve in acceleration section. When the parameter increases, the S curve will become steeper. When the parameter decreases, the S curve will become less steep. The principles of adjusting the S curve parameter in deceleration section are the same as the acceleration section. The calculation of the S curve time is the relationship of acceleration and time. Now the following example illustrates the calculation relationship of S curve and t,

take $P11.08 = 25.00, P11.09 = 12.50, P11.10 = 20.00$ for example, calculate the time t accelerating to the set frequency. As shown in Fig. 6-47, t is made up of three sections: t_1 (Fast acceleration time of the S curve in start segment) + t_2 (Acceleration time of the S curve in the linear section) + t_3 (Fast acceleration time of the S curve in the end segment). The set running frequency is 50.00Hz, $t_1 = \frac{P11.08}{P11.09} = 2s$, the cut-off frequency of t_1 running is 25.00Hz, $t_2 = \frac{P11.08}{P11.10} = 1.25s$, and the initial frequency of t_2 running is 34.40Hz (The time running from 34.4Hz to 50Hz is 1.25s), $t_3 = \frac{50.00 - 34.40}{P11.08} = 0.624s$, therefore, the entire increasing time t is 3.874s.

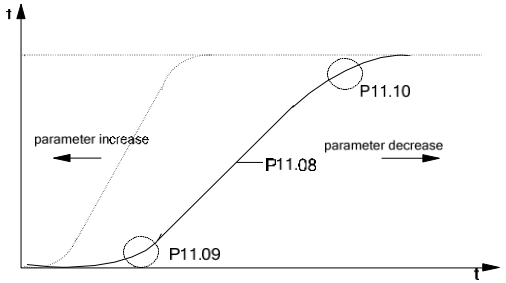

Fig.6-46 Schematic diagram description of adjusting the S curve

P11.14	Switching frequency of Acc/Dec time 1 and 2	0.00~3000.00Hz (0.00 Hz)
P11.15	Switching hysteresis loop frequency of Acc/Dec time 1 and 2	0.00~655.35Hz (1.00 Hz)

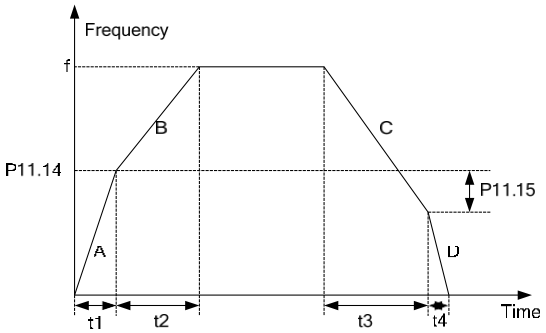

Fig.6-47 Schematic diagram for switching between acceleration/deceleration time 1 and 2

As shown in Fig.6-47, for accelerating the motor 1, operate at the acceleration time 1, as the A curve shown in Fig. 6-47 and the acceleration time $t_1 = \frac{P11.14 \times P02.13}{P02.15}$. When the output frequency increases to the switching point P11.14, the acceleration time will switch from P02.13 to P11.02, as the B curve shown in Fig.6-47and the acceleration time $t_2 = \frac{(f - P11.14) \times P11.02}{P02.15}$. For deceleration, operate at the deceleration time 2, as the C curve shown in the figure and $t_3 = \frac{(f - P11.14 + P11.15) \times F02.14}{P02.15}$, until the output frequency decreases to a frequency (P11.14-P11.15) lower than P11.14, the deceleration time will switch to the deceleration time 1 from 2 switching value, as the D curve shown in the figure, and $t_4 = \frac{(P11.14 - P11.15) \times P11.03}{P02.15}$.

P11.16	Jog acceleration/deceleration time	0.1~60.0s (6.0s)
P11.17	Jog interval time	0.0~100.0s (0.0s)
P11.18	Jog running frequency	0.10~50.00 Hz (5.00 Hz)

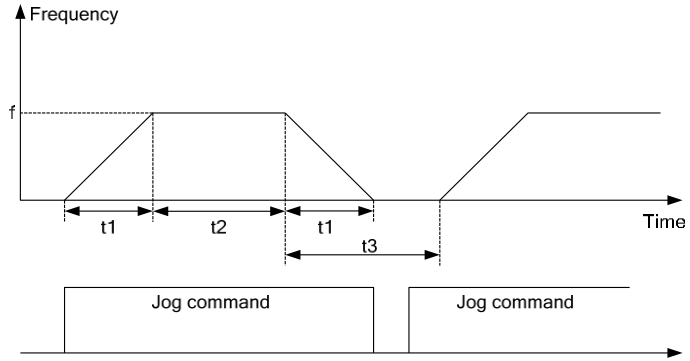

Fig.6-48 Description of the jog running parameter

As shown in Fig. 6-48, t1 is the jog acceleration and deceleration time (P11.16) of actual running. t2 is the jog time and t3 is the jog interval time (P11.17). f is the jog running frequency (P11.18).

The jog acceleration and deceleration time t_1 of actual running is determined by the following equation:

$$t_1 = \frac{P11.16 \times P11.18}{P02.15}$$

The jog interval time (P11.17) is the waiting time interval from canceling the jog command last time to the next valid jog command. In the interval, the jog command will not make the drive operate. The drive operates at zero frequency of the non-output. If the jog command persists, the jog command will be executed after the interval. The jog command is executed immediately after the jog interval.

Note

1.The jog running starts and stops according to start mode 0 and stop mode 0. The unit for the acceleration and deceleration time is second by default.

2. The operation panel, control terminal and serial port can perform the jog control.

P11.19	Upper limit of skip frequency 1	P11.20~3000.00Hz(0.00)
P11.20	Lower limit of skip frequency 1	0.00~P11.19 Hz (0.00)
P11.21	Upper limit of skip frequency 2	P11.22~3000.00 Hz (0.00)
P11.22	Lower limit of skip frequency 2	0.00~P11.21 Hz (0.00)
P11.23	Upper limit of skip frequency 3	P11.24~3000.00 Hz (0.00)
P11.24	Lower limit of skip frequency 3	0.00~P11.23 Hz (0.00)

P11.19~P11.24 are designed to let the output frequency of the drive avoid the resonance frequency point of the mechanical load.

The set frequency of the drive can skip around some frequency point in accordance with the mode shown in Fig.6-49, up to 3 skip ranges can be defined.

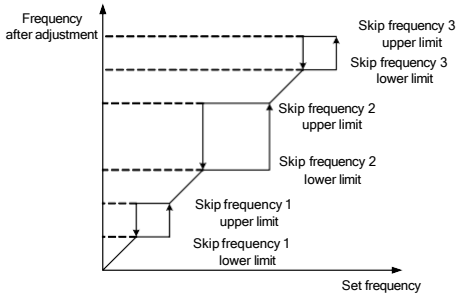

Fig.6-49 Diagram for the skip frequency and scope

After the skip frequency is set, even if the set frequency of the drive is within the mechanical resonance frequency range of the drive system, the output frequency of the drive will be adjusted out of the range to avoid running with the resonance frequency.

6.10 Advanced function parameters (Group P12)

P12.00	Reserved	0
P12.01	Energy-saving running	0~1 (0)

0: Disabled

1: Enabled

In the no-load or light load process of the motor, detect the load current and properly adjust output voltage to achieve energy-saving effect.

Note

This function is especially suitable for the fan and pump load.

P12.02	Carrier frequency	0.7~16.0kHz (4.0)

Table 6-15 Set the carrier wave frequency when the drive is outputting the PWM wave

Drive power	Leave-factory value of carrier wave frequency
G: 0.75～7.5 kW P: 0.75～7.5 kW	6kHz
G: 11～45 kW P: 11～55 kW	4kHz
G: 55～90 kW P:75～110 kW	3kHz
G:110～280 kW P:132～315 kW	2kHz

Note

1.The carrier wave frequency can affect noise during the motor running, generally, it can be set as 3~5kHz. For the occasion when the quiet running is required, the carrier wave frequency can be generally set as 6~8kHz.

2.When the drive is running with the carrier wave frequency above the leave-factory setting value, the drive needs to derate 5% of the power to run for every increase of 1kHz.

P12.03	PWM mode optimization	0000~1111H (1001)

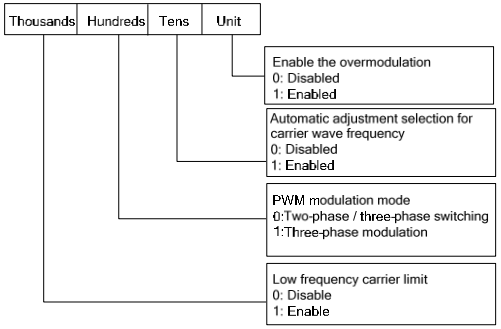

Fig.6-50 PWM mode optimization selection

Unit place: Enable the over-modulation

This function determines whether to enable the over-modulation function controlled by V/F.

0: Disabled

Disable the over-modulation function controlled by V/F.

1: Enabled

Enable the over-modulation function controlled by V/F.

Tens place: Automatic adjustment selection for carrier wave frequency

0: Disabled

1: Enabled

When the carrier wave frequency adjust automatically to select the actions, the drive can adjust the carrier wave frequency automatically according to its internal temperature. At this moment, the actual maximum working carrier wave frequency of the drive is limited by the carrier wave frequency (P12.02) set by the function code.

Hundreds place: Modulation mode

0: Two-phase / three-phase switching

1: Three-phase modulation

Thousands place: Low frequency carrier limit

0: Disable

1: Enable

P12.04	Current loop gain selection	0~1 (0)

0: Manual selection

When P12.05 current loop proportional gain is selected and P12.06 current loop integral time takes effect, the current loop gain can be adjusted by changing P12.05 and P12.06.

1: Calculate automatically (after tuning)

The current loop proportional gain and current loop integral time are automatically calculated in identifying the motor parameter. The PI values are saved to P12.05 and P12.06 respectively after identifying the parameter.

P12.05	Current loop proportional gain ACR-P	1~5000 (600)
P12.06	Current loop integral time ACR-I	0.5~100.0ms (8.0)

P12.05 and P12.06 are the PI regulator parameters of the current loop. Increasing KP or decreasing I of the current loop can accelerate the dynamic response of the system; decreasing KP or increasing I can improve the stability of the system.

Note

For most applications, it is not necessary to adjust the PI parameter of the current loop. It is recommended to change this parameter carefully.

P12.07	Anti-trip function enabling	0~1 (0)
P12.08	Frequency reduction rate upon voltage compensation	0.00~99.99 Hz/s (10.00)

Anti-trip function is used for defining whether the drive automatically performs low voltage compensation in case of voltage decreasing or instantaneous under-voltage. The anti-trip operation shall be kept for the drive via the load feedback energy by properly decreasing the output frequency.

When P12.07 is set as 0, disabled.

When P12.07 is set as 1, enabled and perform the compensation for the low voltage.

When performing the voltage compensation, if the setting of the frequency reduction rate P12.08 is too large and the load instantaneous feedback energy is also too large, the over-voltage protection may be incurred. If the P12.08 setting is too small and the load feedback energy is too small, the compensation for the low voltage function may not be enabled. When adjusting, please reasonably select it according to the load inertia and heavy or light load.

P12.09	Pre-magnetizing time	0.0~10.0s (0.0)

The pre-magnetizing is used for creating the magnetic field before the startup of the asynchronous motor.

P12.10	Minimum flux reference value	10~150 %(10%)
P12.11	Low intensity magnetic adjustment coefficient 1	0~10000 (2000)
P12.12	Low intensity magnetic adjustment coefficient 2	0~10000 (2000)
P12.13	Low intensity magnetic control mode	0~2 (1)

P12.14	Cooling fan control	0~2 (2)

0: Operate automatically

Internal temperature detection program will be automatically started during the drive operation to determine the operation of the fan according to the module temperature. If the fan is running before the drive stop, the fan will run for another 3 minutes after the drive shuts down, and then the internal temperature detection program will be started.

1: The fan keeps running when the power is on.

The fan keeps running after the drive is powered up.

2: Fun operates based on command

When the drive will operate normally upon receiving the running command, the fan will also operate. When the drive stops running, so does the fan.

P12.15～P12.27	Reserved	0

6.11 Multi-stage reference and simple PLC parameters (Group P13)

P13.00	Multi-stage reference property setting	0~1 (0)

0: Multi-stage frequency reference

As a frequency mode, it is applied to multi-speed operation mode and simple PLC operation mode.

1: Multi-stage closed loop reference

As a voltage reference, it is applied to the process PID operation mode.

P13.01	Multi-stage reference 1	-100.0~100.0%(10.0%)
P13.02	Multi-stage reference 2	-100.0~100.0%(20.0%)
P13.03	Multi-stage reference 3	-100.0~100.0%(40.0%)
P13.04	Multi-stage reference 4	-100.0~100.0%(60.0%)
P13.05	Multi-stage reference 5	-100.0~100.0%(80.0%)
P13.06	Multi-stage reference 6	-100.0~100.0%(90.0%)
P13.07	Multi-stage reference 7	-100.0~100.0%(100.0%)
P13.08	Multi-stage reference 8	-100.0~100.0%(10.0%)
P13.09	Multi-stage reference 9	-100.0~100.0%(20.0%)
P13.10	Multi-stage reference 10	-100.0~100.0%(40.0%)
P13.11	Multi-stage reference 11	-100.0~100.0%(60.0%)
P13.12	Multi-stage reference 12	-100.0~100.0%(80.0%)
P13.13	Multi-stage reference 13	-100.0~100.0%(90.0%)

P13.14	Multi-stage reference 14	-100.0~100.0%(100.0%)
P13.15	Multi-stage reference 15	-100.0~100.0%(100.0%)

When it is the multi-stage frequency, its setting range can be set as 0.0%~100.0%, corresponding to zero frequency to the maximum frequency. When used as multi-speed operation independently, its operating direction is controlled by the running terminal. When the running terminal is forward output (FWD), operate the forward frequency. When the running terminal is reverse output (REV), operate the reverse frequency. The running direction shall be set correspondingly according to PLC while operating as PLC.

When it is the multi-stage closed loop reference, -100.0%~100.0% corresponds to -10V~+10V.

P13.16	Simple PLC running mode selection	0~1122H(0000)

Simple PLC function is a multi-speed generator, the drive can automatically change its running frequency and direction according to its running time, to meet the requirements of the process. This function was previously completed by PLC (programmable logic controller), but now it can be realized by the drive itself, as shown in Fig. 6-51.

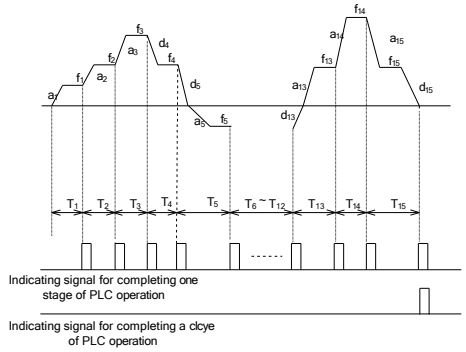

Fig.6-51 Simple PLC running chart

Fig. 6-51 a_1~a_{15}, d_1~d_{15} indicate the acceleration and deceleration time of their current stages, f_1~f_{15}, T_1~T_{15} indicate the set frequency and stage running time of their current stages, which will be defined in the following function codes respectively.

PLC stage and cycle completion indication can indicate signals via the two-way open collector output terminal Y1, Y2 or the 500ms pulse of relay output. Please refer to the function “11” PLC stage running achieved indication and “12” PLC cycle achieved indication in P09.18~P09.20.

The simple PLC running mode selections for P13.16 are as follows:

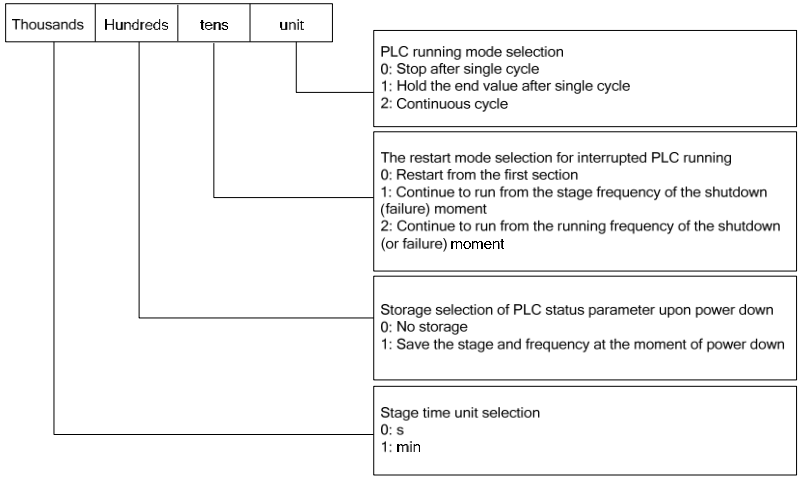

Fig.6-52 Simple PLC running mode selection

Unit place: PLC running mode selection

0: Stop after single cycle

As shown in Fig. 6-53, the drive will be stop automatically after completing one cycle, and it can start up only after giving another running command.

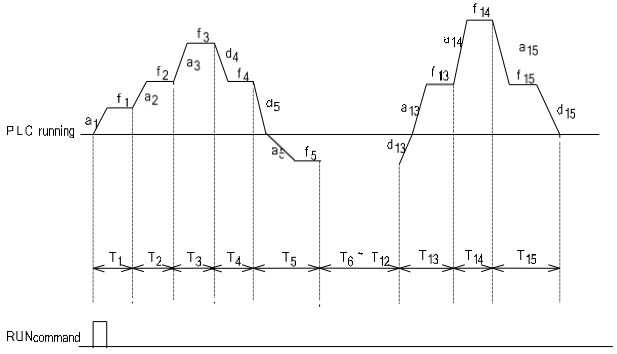

Fig.6-53 Stop mode of PLC after single cycle

1: Hold the end value after single cycle

As shown in Fig. 6-54, the drive will hold the running frequency and direction of the last section automatically after completing a single cycle.

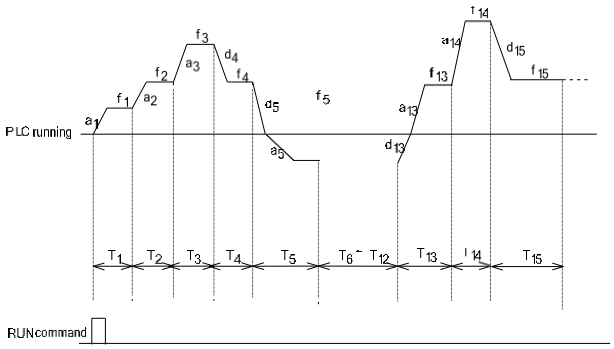

Fig.6-54 Retention mode of PLC after single cycle

2: Continuous cycle

As shown in Fig. 6-55, the drive will start next cycle automatically after completing one cycle, and it will not stop until a stopping command is given.

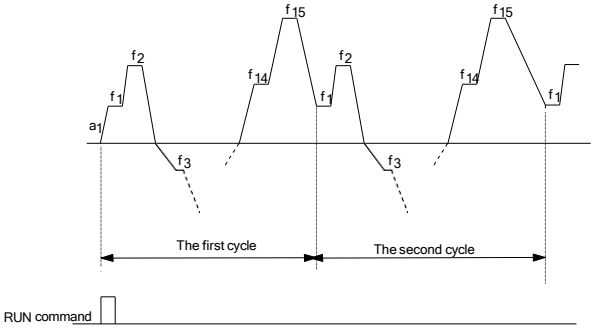

Fig.6-55 PLC continuous cycle mode

Tens place: The restart mode selection for interrupted PLC running

0: Restart from the first section

If it is stopped (caused by stopping command, fault or power down) during operation, it will operate from the first section after restarting.

1: Continue to run from the stage frequency of the stop (fault) moment

If it is stopped (caused by a stopping command or fault) during operation, the drive will automatically record the running time of the current stage and enter this stage after restarting, and it will complete the remaining running time at the set frequency of this stage, as shown in Fig. 6-56:

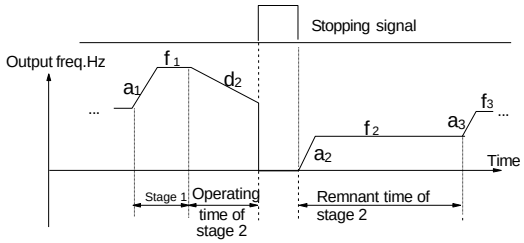

a 1: Acc time of stage 1
a 3: Acc time of stage 3
f 1: Freq. of stage 1
f 3: Freq. of stage 3
a 2: Acc time of stage 2
d 2: Dec time of stage 2
f 2: Freq. of stage 2

Fig.6-56 PLC start mode 1

2: Continue to run from the running frequency of the stop (or fault) moment

If it is stopped (caused by a stopping command or fault) during operation, the drive will not only automatically record the current running time but also the running frequency of the stop moment, when restarted, it will be restored to the running frequency of the stop moment, and then continue the remaining running time, as shown in Fig. 6-57.

Note

The difference between the mode 1 and 2 is that latter can record the running frequency of the stop moment, and continue to run from this frequency after restarting.

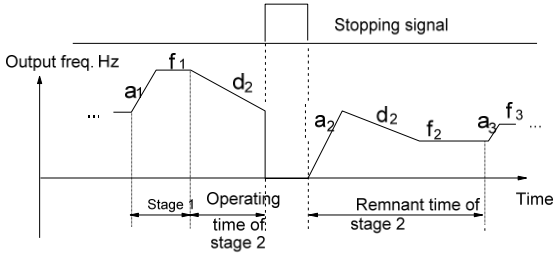

a 1 : Acc time of stage 1
a 3 : Acc time of stage 3
f 1 : Freq. of stage 1
f 3 : Freq. of stage 3
a 2 : Acc time of stage 2
d 2 : Dec time of stage 2
f 2: Freq. of stage 2

Fig.6-57 PLC start mode 2

Hundreds place: Storage selection of PLC status parameter upon power down

0: No storage

The PLC running status will not be saved upon power down, and it will restart from the first section after power on.

1: Save the stage and frequency at the moment of power down

Record PLC running status upon power-down, including the stage of the power-down moment, running frequency, and the running time. It shall be continued with the restart mode of interrupted PLC running defined in the tens places after power-on.

Thousands place: Stage time unit selection

0: s

The running time of each stage will be counted by seconds.

1: min

The running time of each stage will be counted by minutes.

This unit is only valid for PLC running stage time T_1~T_{15}, the acceleration/ deceleration time unit during PLC operation shall be determined by P11.01.

Note

1. If the running time setting of a certain section of the PLC is zero, this section is disabled.

2.Functions such as pause, disabled, memory status reset can be performed for the PLC process via terminals, please refer to the function definition of Group P09 terminals.

P13.17	Stage 1 setting	0~327H (000)
P13.18	Stage 1 running time	0.0~6500.0 (20.0)
P13.19	Stage 2 setting	0~327H (000)
P13.20	Stage 2 running time	0.0~6500.0 (20.0)
P13.21	Stage 3 setting	0~327H (000)
P13.22	Stage 3 running time	0.0~6500.0 (20.0)
P13.23	Stage 4 setting	0~327H (000)
P13.24	Stage 4 running time	0.0~6500.0 (20.0)
P13.25	Stage 5 setting	0~327H (000)
P13.26	Stage 5 running time	0.0~6500.0 (20.0)
P13.27	Stage 6 setting	0~327H (000)
P13.28	Stage 6 running time	0.0~6500.0 (20.0)
P13.29	Stage 7 setting	0~327H (000)
P13.30	Stage 7 running time	0.0~6500.0 (20.0)
P13.31	Stage 8 setting	0~327H (000)
P13.32	Stage 8 running time	0.0~6500.0 (20.0)
P13.33	Stage 9 setting	0~327H (000)
P13.34	Stage 9 running time	0.0~6500.0 (20.0)
P13.35	Stage 10 setting	0~327H (000)
P13.36	Stage 10 running time	0.0~6500.0 (20.0)

P13.37	Stage 11 setting	0~327H (000)
P13.38	Stage 11 running time	0.0~6500.0 (20.0)
P13.39	Stage 12 setting	0~327H (000)
P13.40	Stage 12 running time	0.0~6500.0 (20.0)
P13.41	Stage 13 setting	0~327H (000)
P13.42	Stage 13 running time	0.0~6500.0 (20.0)
P13.43	Stage 14 setting	0~327H (000)
P13.44	Stage 14 running time	0.0~6500.0 (20.0)
P13.45	Stage 15 setting	0~327H (000)
P13.46	Stage 15 running time	0.0~6500.0 (20.0)

P13.17, P13.19, P13.21, P13.23, P13.25, P13.27, P13.29, P13.31, P13.33, P13.35, P13.37, P13.39, P13.41, P13.43 and P13.45 are used to configure the running frequency, direction, acceleration / deceleration time for each stage of the PLC, and they are selected by bits. As shown in Fig.6-58.

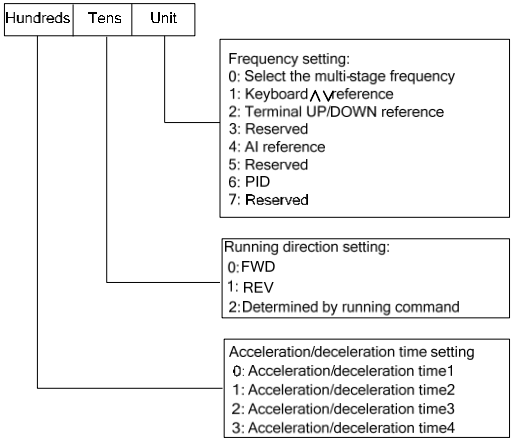

Fig.6-58 Setting of PLC stage

Unit place of LED setting of the PLC i stage:

0: Select the multi-stage frequency i

For example, when i=3, the frequency of stage 3 is the multi-stage frequency 3. For the definition of the multi-stage frequency, please refer to P13.00~P13.46.

1: Digital reference 1: Keyboard ∧∨ reference

2: Digital reference 2: Terminal UP/DN reference

3: Reserved

4: AI analog reference

The function code P10.01 shall be set for AI analog reference. 1 or 9 shall be set for this terminal function according to input analog signal (Their directions are all determined by LED's tens place setting of PLC current stage).

5: Reserved

6: Process closed loop PID

7: Reserved

Note

When the stage running direction of PLC is determined by running command, the running direction of motor can be changed from external direction command in real time. For example, the forward and reverse running can be realized via X terminal. The running direction is the direction determined by the running command; if the direction is uncertain, then follow the direction of last section.

6.12 Process PID parameters (Group P14)

The PID closed loop control adopts the combinations of proportional control (P), integral control (I) and differential control (D). This is a control mode which makes the feedback value consistent with the target value.

Proportional control (P)

The control quantity in proportion to the deviation cannot only rely on P control to eliminate steady-state error.

Integral control (I)

The control quantity in proportion to the deviation integral value can eliminate steady-state error, but it cannot control sharp change.

Differential control (D)

The control quantity in proportion to the deviation change rate can predict the change tendency of the deviation, quickly response to sharp change and improve dynamic performance, but it is vulnerable to interference, so use D control only when necessary. The PID control block diagram is as shown in Fig. 6-59.

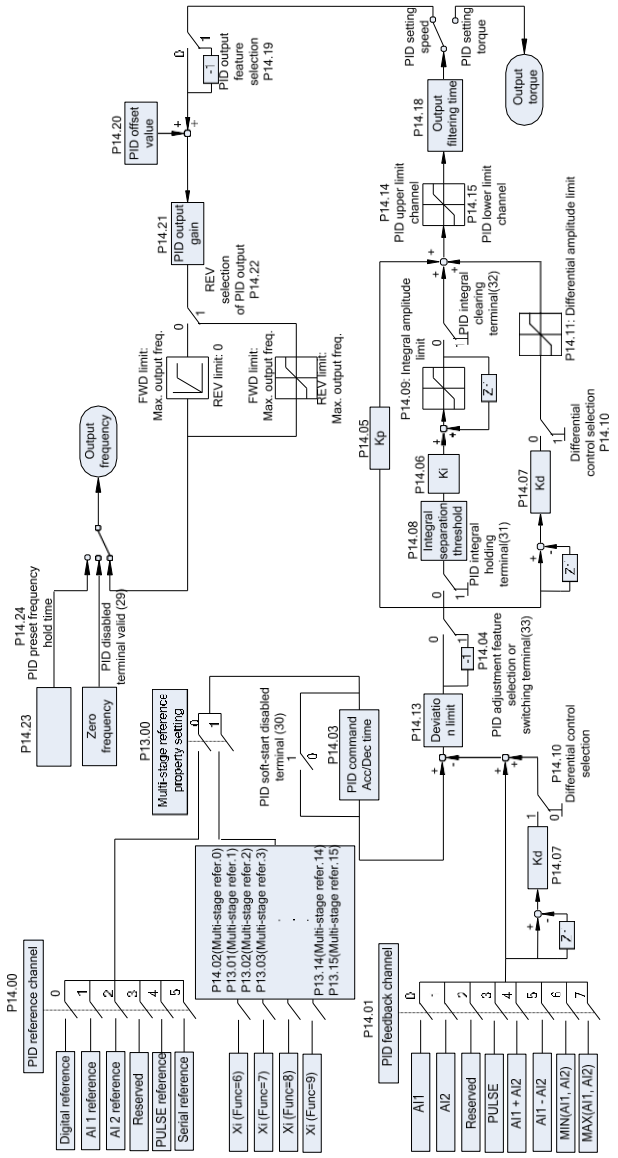

Fig.6-59 PID control block diagram

P14.00	Reference channel selection	0~5 (0)

0: P14.02 digital reference

1: AI1 analog reference

2: AI2 analog reference

3: Reserved

4: Terminal PULSE reference

5: Serial port communication reference

P14.01	Feedback channel selection	0~7 (0)

0: AI1 analog feedback

1: AI2 analog feedback

2: Reserved

3: Terminal PULSE feedback

4: AI1 + AI2

5: AI1 – AI2

6: Min{AI1, AI2}

7: Max{AI1, AI2}

P14.02	PID digital reference	-100.0~100.0%(0.0%)

This value can be set via the operation panel or the serial port.

P14.03	PID command acceleration/deceleration time	0~3600.0s (0.0s)

The PID command acceleration / deceleration is the soft start function to increase or decrease the PID target value by the set acceleration / deceleration time.

The set time refers to the required time adding from 0.0% command to 100.0% command or the time decreasing from 100.0% command to 0.0% command.

P14.04	PID adjustment feature selection	0~1(0)

0: Positive action. When the reference increases, it shall be used when the motor is required to increase its rotating speed.

1: Negative action. When the reference increases, it shall be used when the motor is required to decrease its rotating speed.

P14.05	Proportional gain Kp	0.000~10.000(0.500)

The larger Kp is, the quicker response becomes, but too large Kp may easily cause oscillation and the steady-sate error cannot be eliminated by using Kp control only.

P14.06	Integral gain Ki	0.000~10.000(0.008)

The main functions of Ki lie in eliminating steady-state deviation and making the feedback value consistent with the target value. Too large Ki may easily cause overshoot and oscillation.

P14.07	Differential gain Kd	0.000~10.000(0.000)

Kd is used for improving the response performance of the system, but too large configuration may easily cause oscillation.

P14.08	Integral separation threshold	0.0~100.0%(30.0%)

The integral calculation will be stopped when the deviation of the reference and feedback is greater than the setting. This function is used for reducing overshoot and oscillation incurred by the integral action in the dynamic process.

P14.09	Integral amplitude limit	0.0~100.0%(100.0%)

Output values used for limiting the integral adjustment:

When the PID output serves as the frequency reference, use the maximum output frequency as 100%.

When the PID output serves as the torque reference, use 300% rated torque as 100%.

P14.10	Differential control selection	0~1 (0)

0: Perform differential control for the deviation of reference value and feedback value

1: Perform differential control for feedback value, applicable to frequent and quick changes of the reference value.

P14.11	Differential amplitude limit	0.0~100.0%(10.0%)

Output values used for limiting the differential adjustment.

When the PID output serves as the frequency reference, use the maximum output frequency as 100%.

When the PID output serves as the torque reference, use 300% rated torque as 100%.

P14.12	Sampling cycle	0.001~50.000s (0.010s)

This is not only the sampling cycle for the feedback, but also the control cycle for PID. The PID regulator calculates once for each sampling cycle. The bigger the sampling cycle is, the slower the response becomes.

P14.13	Deviation limit	0.0~20.0%(2.0%)

When the deviation of the reference value and feedback value relative to the percentage of reference value is less than the deviation limit setting, the PID will stop adjusting and the output remains unchanged. This function can avoid frequent actions of the PID control.

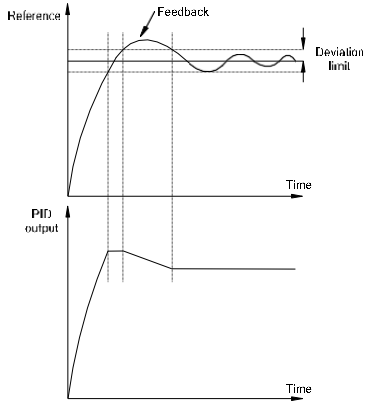

Fig.6-60 Schematic diagram of deviation limit

P14.14	PID upper limit channel	0~2 (0)

0: PID upper limit given by P14.16 digital

1: PID upper limit given by AI1 analog

2: PID upper limit given by AI2 analog

P14.15	PID lower limit channel	0~2(0)

0: PID lower limit given by P14.17 digital

1: PID lower limit given by AI1 analog

2: PID lower limit given by AI2 analog

P14.16	PID upper limit digital reference	P14.17~100.0%(100.0%)
P14.17	PID lower limit digital reference	0.0%~P14.16(0.0%)

Used for limiting the PID output value:

When the PID output serves as the frequency reference, use the maximum output frequency as 100%.

When the PID output serves as the torque reference, use 300% rated torque as 100%.

P14.18	Output filtering time	0.000~10.000s (0.010s)

For the filtering time of the PID regulator output, the bigger the output filtering time is, the slower the response will become.

P14.19	PID output feature selection	0~1 (0)

0: Positive feature

1: Negative feature, making the PID output reverse its polarization.

P14.20	PID offset value	-100.0~100.0%（0.0%）

Adjust the offset value of the PID control output and set the maximum output frequency as 100.0%.

P14.21	PID output gain	0.0~250.0 (1.0)

Adjust the gain coefficient of the ultimate output, ultimate PID output = PID output x PID output gain.

It has an obvious effect when it is used for adjusting the compensation dosage.

P14.22	REV selection of PID output	0~1 (1)

0: When PID output is negative, force PID output to be set as 0.

1: When PID output is negative, keep the negative output.

Note: If PID output serves as the speed correction, please select 1.

P14.23	PID preset frequency	0.00~3000.00Hz (0.00 Hz)
P14.24	PID preset frequency hold time	0.0~3600.0s (0.0s)

Properly setting PID preset frequency and preset frequency retention time can make the closed loop adjustment quickly enter into stable stage.

After PID operation, the frequency will accelerate to PID preset frequency firstly according to acceleration / deceleration time. And it operates according to PID adjustment output only after its continuous operating time at this frequency point reaches the time set by P14.24.

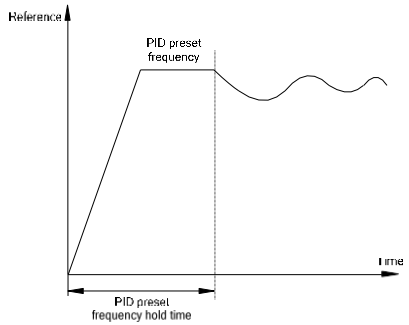

Fig.6-61 Schematic diagram of PID preset frequency running

P14.25	PID fault detection selection	00~22H (00)

Unit place: PID feedbacks the fault detection selection

0: Continue to run, no alarm

1: Continue to run and display “AL.FbL” (feedback lost) or “AL.Fbo” (feedback exceeding limit)

2: Coast to stop and display “Er.FbL” (feedback lost) or “Er.Fbo” (feedback exceeding limit)

Note: Once a PID feedback fault occurs (feedback lost or feedback exceeding limit), the multi-functional output terminals of the corresponding “feedback loss” and “feedback exceeding limit” will output.

Tens place: PID limit setting error processing selection

0: Continue to run, no alarm

1: Continue to run and display “AL.PIL”

2: Coast to stop and display “Er.PIL”

When the set PID lower limit is greater than PID upper limit , wrong PID limit value setting will occur.

P14.26	PID feedback loss detection value	0.0~100.0(0.0%)
P14.27	PID feedback lost detection time	0.0~25.0s (1.0s)

When the feedback signal is less than the detection value set by P14.26 and its time exceeds the time set by P14.27, then PID feedback is considered as “loss”.

P14.28	PID feedback exceeding limit detection value	0.0~100.0%(100.0%)
P14.29	PID feedback exceeding limit detection time	0.0~25.0s (1.0s)

When the feedback signal is greater than the detection value set by P14.28 and its time exceeds the time set by P14.29, then PID feedback is considered as “exceeding limit”.

6.13 Communication parameters (Group P15)

P15.00	Protocol selection	0~1 (0)

0: Modbus protocol

1: Reserved

P15.01	Communication configuration	0~155H (001)

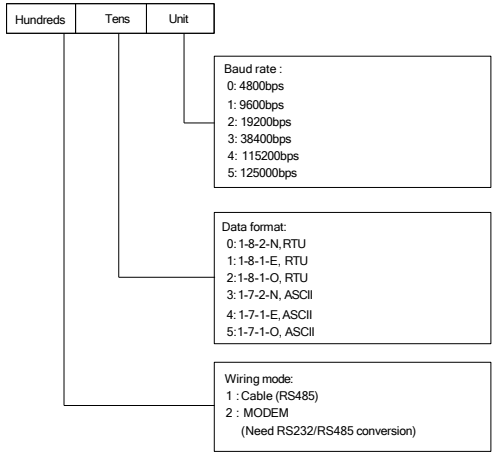

Fig.6-62 Setting of communication configuration

This function is used for selecting parameters for serial communication port and setting according to LED bits.

If the hundreds place of the function code is in MODEM mode, whenever the drive powers up, the initialization operation will be performed once for MODEM via RS485 port on the control board, so that the MODEM can automatically response after receiving 3 times of ringing signal of telephone line to realize the remote control line made up from dial-up line.

Note: MV200 control board provides RS485 port only. If the communication port of the external equipment is RS232, the RS232/RS485 conversion equipment shall be added separately.

P15.02	Local address	0~247 (5)

This function code is used for marking the address of drive.

Note: 0 is the broadcast address. If it is set as the broadcast address, it can only receive and execute the broadcast command from the host device, and will not respond to the host device.

P15.03	Communication timeout detection time	0.0~1000.0s (0.0s)

When the serial port communication signal disappears for a period of time exceeding the set value of this function code, the drive is considered as communication fault.

When the set value is 0, the drive will not detect the serial port communication signal.

P15.04	Response delay of the drive	0~1000ms (5ms)

The serial port of the drive receives and executes commands from the host device, until going back to the delay time which the response frame gave to the host device. For the RTU mode, the actual response delay shall be no less than the transmission time of 3.5 characters.

P15.05	Reserved function 1 for user	0~65535 (0)

Reserved.

P15.06	Reserved function 2 for user	0~65535 (0)

Reserved.

6.14 Keyboard display setting parameters (Group P16)

P16.00	LED display parameter selection when running	0~3F7H (007)

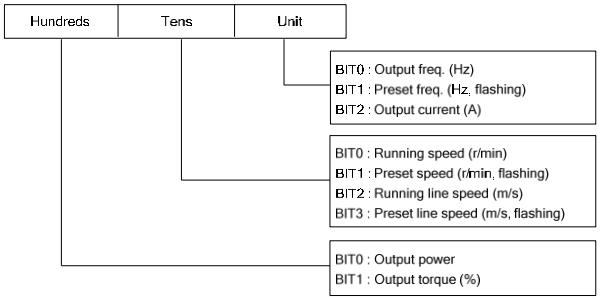

Fig.6-63 Setting of LED display parameter selection 1 when running

P16.00 and P16.01 define the parameters that LED can display when the drive is in running state.

When 0 is selected for the BIT bit, it indicates that the parameter is not displayed.

When 1 is selected for the BIT bit, it indicates that the parameter is displayed.

P16.01	LED display parameter selection 2 when running	0~F7H (00)

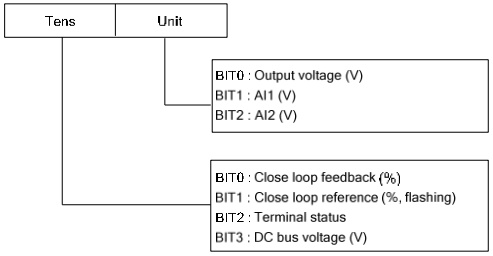

Fig.6-64 Setting of LED display parameter selection 2 when running

For the displayed terminal status, the terminal status adopts the defined value of the LED digital diode through the multi-functional input terminal X1~X6 status (bit0~bit5 corresponding to X1~X6) and output terminal Y1, Y2 and RO1 (bit12~bit14 corresponding to Y1, Y2 and RO1) to indicate the status of each function terminal. For instance, when X1, X2 terminals are closed while other terminals are disconnected, it indicates that the terminal state value is 03H.

Note: When the rotating speed or the line speed is displayed, it can be directly changed by pressing ∧ or ∨ key (no need to switch into the frequency state).

When 0 is selected for all the P16.00 and P16.01 BIT bits, the output frequency will be displayed by default.

In the running parameter display state, the parameters for display can be switched in turn by pressing the shift key 》.

P16.02	LED display parameter selection when stop	0~FFFH (009)

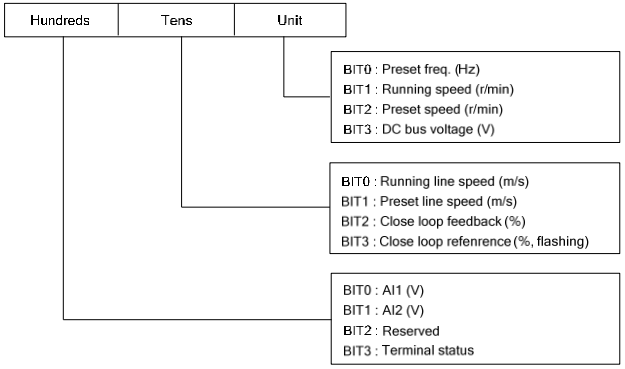

Fig.6-65 Setting of LED display parameter selection when stop

This parameter defines the parameters that LED can display when the drive is in stop state.

When 0 is selected for the BIT bit, it indicates that the parameter is not displayed.

When 1 is selected for the BIT bit, it indicates that the parameter is displayed.

Note: When the rotating speed or the line speed is displayed, it can be directly changed by pressing ∧ or ∨ key (no need to switch into the frequency state).

When 0 is selected for all the P16.02 BIT bits, the set frequency will be displayed by default.

In the stop parameter display state, the parameters for display can be switched in turn by pressing the shift key 》.

P16.03	Line speed coefficient	0.1~999.9% (1.0%)

This function code is used for correcting the line speed proportion display error, and it has no influence on the actual rotating speed.

P16.04	Rotating speed display coefficient	0.1~999.9% (100.0%)

This function code is used for correcting the rotating speed proportion display error, and it has no influence on the actual rotating speed.

P16.05	Close loop display coefficient	0.1~999.9% (100.0%)

This function code is used for correcting the display error between the actual physical parameters (voltage, flow, etc.) and the reference or feedback parameter (voltage, current) in the PID closed loop control, and it has no influence on the PID closed loop adjustment.

P16.06	Inverter module temperature	0.0~150.0℃(0.0)
P16.07	Rectifier module temperature	0.0~150.0℃(0.0)

P16.06 indicates the temperature of the inverter module. The over-temperature protection values of the inverter modules of different types may be different.

P16.07 indicates the temperature of the rectifier. The temperature of the rectifier bridge below 15kWG (18.5kWP) will not be detected.

Temperature display range: 0~150℃; precision: 5%.

P16.08	Motor temperature measured	0~200℃ (0)

This function code indicates the motor temperature measured in actual situation.

P16.09	Accumulated power-on hours	0~65535 (0)
P16.10	Accumulated running time	0~65535 (0)
P16.11	Accumulated running hours of fan	0~65535 (0)

P16.09~P16.11 are used for indicating the accumulated power-up hours, running hours and running hours of the fan of the drive from leaving the factory to now.

6.15 Fieldbus option parameters (Group P40)

The field bus option parameter group is used for indicating and setting parameters for the bus options. This group of function codes is displayed only when the bus option works normally.

P40.00	Option type	000~FFF (000)

000: No communication option

001: Profibus-DP

Others: Reserved

P40.01	Option hardware version	0.00~99.99 (1.00)
P40.02	Option software version	0.00~99.99 (1.00)

P40.01 and p40.02 are used for representing the hardware version and software version of the option respectively.

P40.03~P40.21	Reserved	0
P40.22	Option reset selection	0~1 (0)

Option reset action selection

0: Do not reset or reset successfully

1: Enable option reset

P40.23	Profibus-DP PPO type selection	1~5 (1)

Profibus-DP bus PPO type selection

1~5: PPO1~PPO5.

P40.24	Communication baud rate display or selection	0~99 (0)

This function code is used for indicating and setting the communication baud rate.

When the option is a Profibus-DP card (P40.00 = 001), this function code is used for indicating the current communication baud rate and the corresponding baud rates are shown as follows:

0: 9.6 kbps 1: 19.2 kbps 2: 45.45 kbps
3: 93.75 kbps 4: 187.5 kbps 5: 500 kbps
6: 1.5 Mbps 7: 3 Mbps 8: 6 Mbps
9: 12 Mbps

Other options: Reserved

P40.25	Option fault display	0~1 (0)

Option fault status display

0: Option is normal

1: Option wire-break or other faults

P40.26	Communications disconnection detection time	0.0~10.0(0.0)

Profibus-DP bus master and slave communications disconnection detection time.

When this function code is 0, do not perform break detection.

P40.27～P40.29	Reserved	0
P40.30～P40.39	Output data mapping	0~9999 (0)

Please refer to the Option Manual for details.

P40.40～P40.49	Input data mapping	0~9999 (0)

Please refer to the Option Manual for details.

6.16 Protection and fault parameters (Group P97)

P97.00	Fault protection and alarm property setting 1	0~1113H (0000)

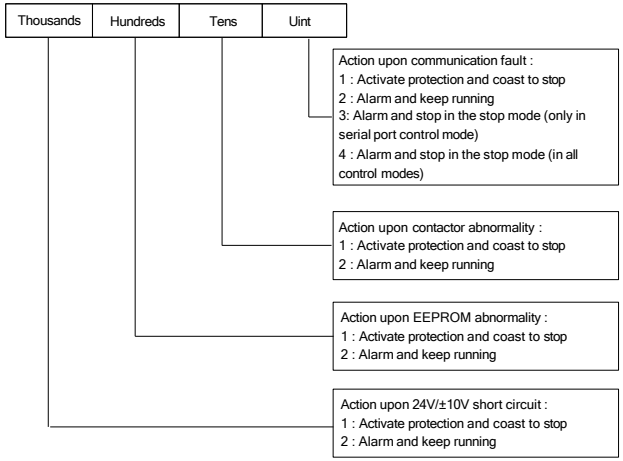

Fig.6-66 Fault protection and alarm property setting 1

P97.01	Fault protection and alarm property setting 2	0~2223H (0000)

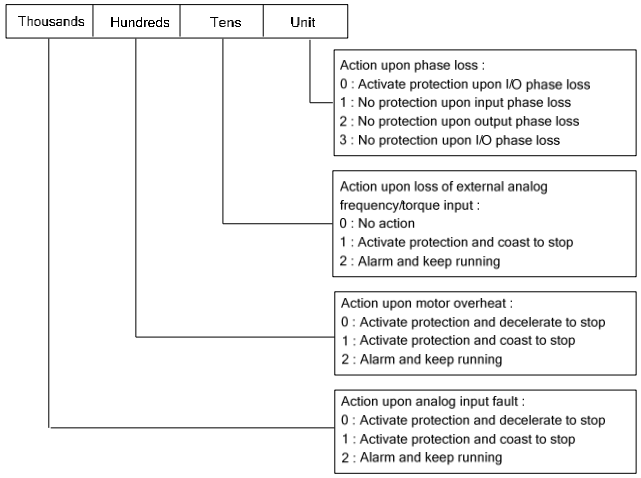

Fig.6-67 Fault protection and alarm property setting 2

P97.02	Fault protection and alarm property setting 3	0~2113H (0000)

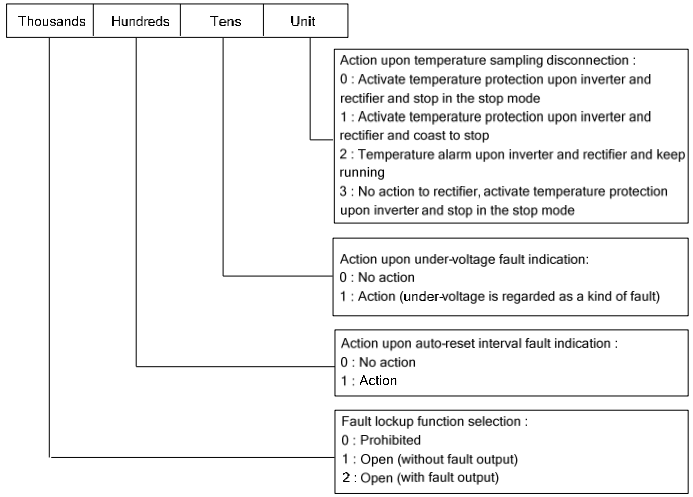

Fig.6-68 Fault protection and alarm property setting 3

In certain abnormal situations, the drive can shield faults and stop actions and keep operating by setting P97.00, P97.01 and P97.02.

The operation panel at that moment will display an alarm AL.XXX (XXX represents the alarm code. For details, please refer to Chapter 7 Troubleshooting).

P97.00 defines the protection action selections for abnormal communication, abnormal contactor, abnormal EEPROM and 24V/±10V short circuit.

Note: If "1" is selected for ±10V short circuit action. When a ±10V short circuit fault occurs and lasts, the drive will automatically report Er.10v after the alarm operates for 15 minutes. When a 24V short circuit fault occurs, the drive will report Er.24v immediately and stop no matter what 0 or 1 is selected for the thousands place of P97.00.

P97.01 defines the protection action selections for input/output phase loss, external analog frequency / torque command loss, motor over-temperature and analog input fault.

P97.02 defines the protection action selections for temperature sampling disconnection, under-voltage fault, auto reset interval fault and fault locking.

P97.03	Overload protection setting for motor	0~2113H (0001)

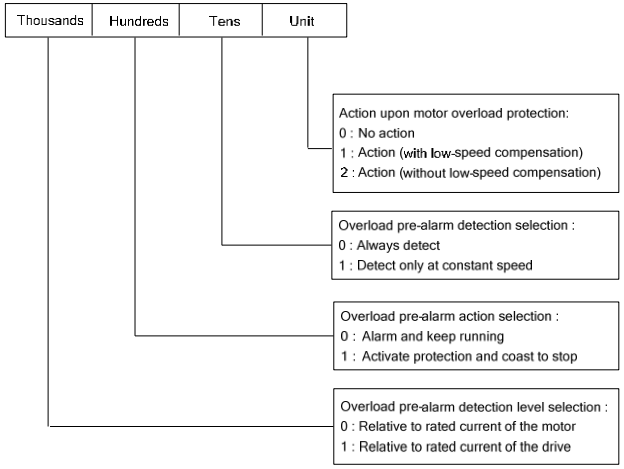

Fig.6-69 Overload protection setting for motor

Unit place: Motor protection mode

0: Disabled

The drive has no overload protection for the load motor (This function shall be selected carefully)

1: Common motor (with low speed compensation)

Because the heat dissipation of the common motor at low speed will be degraded, the corresponding electronic thermal protection value shall be properly adjusted. Low speed compensation means to lower the motor overload protection threshold for the motor with the running frequency lower than 30Hz.

2: Variable-frequency motor (without low speed compensation)

Because the heat dissipation of the special motor for drive is not affected by the rotating speed, it does not need the protection value adjustment for low-speed operation.

Tens place: Overload pre-alarm detection selection

0: The overload detection works during the operation of the drive

1: The overload detection works only when the drive runs at constant speed.

Hundreds place: Overload pre-alarm action selection

0: The drive generates an alarm and continues operating when the overload detection is enabled, and the operation panel will display AL.oL1 or AL.oL2 according to the setting of the hundreds place.

1: The drive will activate protection action and coast to stop when the overload detection is enabled, and the operation panel will display Er.oL1 or Er.oL2 according to the setting of the hundreds place.

Thousands place: Overload detection level selection

0: The detection level relative to the motor rated current (Alarm code AL.oL2 and fault code Er.oL2)

1: The detection level relative to the drive rated current (Alarm code AL.oL1 and fault code Er.oL1)

P97.04	Overload pre-alarm detection level	20.0~200.0%(130.0%)

This function code defines the current threshold for the overload pre-alarm action. The setting value is the percentage relative to the rated current (refer to the thousands place of P97.03).

P97.05	Overload pre-alarm detection time	0.0~60.0s (5.0s)

This function code defines the output overload pre-alarm signal after the time that the drive output current is greater than the overload detection level (P97.04) exceeds the setting time.

When the drive output current is higher than the overload detection level (P97.04), the pre-alarm detection timing will be gradually increased. When the drive output current is lower than the overload detection level, the pre-alarm detection timing will be gradually decreased. When the overload pre-alarm status is enabled, it means that the drive overload detection timing time exceeds the overload pre-alarm detection time. Schematic diagram for the overload pre-alarm detection function is shown as follows:

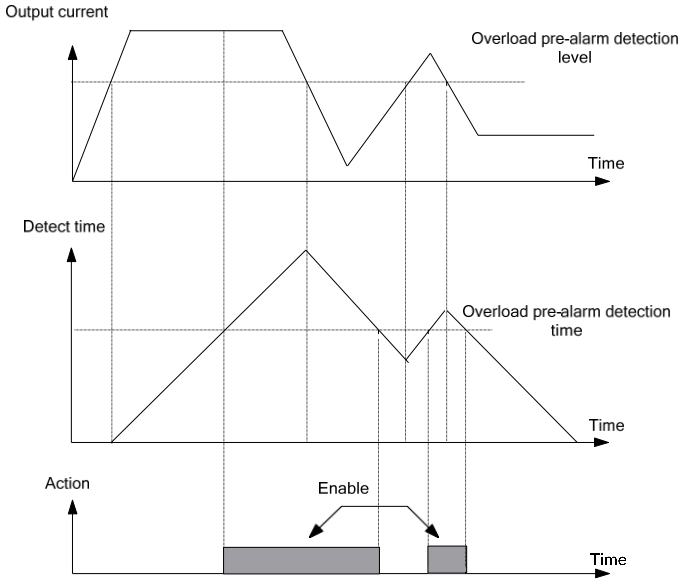

Fig.6-70 Schematic diagram for the overload pre-alarm detection function

P97.06	Motor over-temperature protection point	0~10.00V(10.00)

Compare the analog feedback quantity of the thermal sensor installed on the motor with the preset protection threshold P97.06 of the sensor. If the feedback quantity is greater than the protection threshold for more than 10s, the drive will report the motor over-temperature fault (Er.oHL). This value can be set properly only when customers know the temperature change resistance value regularity of the motor temperature detection.

P97.07	Over-voltage stall selection	0~1 (1)
P97.08	Over-voltage point at stall	120.0~150.0%(140.0%)

P97.07 = 0 means the over-voltage stall action is disabled.

P97.07 = 1 means the over-voltage stall action is enabled.

During the deceleration operation of the drive, due to the load inertia, the actual dropping rate of the motor rotating speed may be lower than the dropping rate of the output frequency. At this time the motor will feed back the power supply to the drive, causing the DC bus voltage of the drive to increase. If no protection measure is taken for this, the drive will trip because of over-voltage.

The over-voltage stall protection function can detect the bus voltage during the drive deceleration operation and compare it with the stall over-voltage point defined by P97.08 (relative to the standard bus voltage). If it exceeds the stall over-voltage point, the drive output frequency will stop falling. The deceleration operation will not be resumed until the bus voltage is detected to be lower than the stall over-voltage point again, as shown in Fig.6-71.

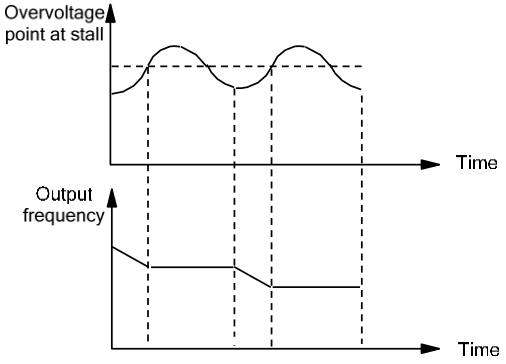

Fig.6-71 Over-voltage stall function

P97.09	Auto current limiting action selection	0~1 (1)
P97.10	Auto current limiting level	20.0~200.0%(150.0%/110.0%)
P97.11	Frequency reduction rate upon current limiting	0.00~99.99Hz/s(10.00)

The auto current limiting function refers to automatically limiting the load current to lower than the preset auto current limiting level (P97.10) through real time monitoring on the load current, so as to prevent the tripping caused by current overshoot. This function is especially useful for the loads with large inertia or drastic change.

The auto current limiting level (P97.10) defines the current threshold for the auto current limiting action. Its setting range is the percentage relative to the drive rated current. Its leave- factory value varies depending on the model, the G-type is 150% and the P-type is 110%.

The frequency reduction rate upon current limiting (P97.11) defines the adjustment rate of the output frequency upon the auto current limiting.

If the frequency reduction rate upon current limiting (P97.11) is too small, it is difficult to get out of the auto current limiting state, and it may ultimately cause overload fault. If its reduction rate is too large, the frequency adjustment will be drastic, and the drive may be always in the power generation state, which will cause over-voltage protection.

The auto current limiting function is always enabled in the acceleration/deceleration state, and whether it will be enabled in constant speed operation depends on the auto current limiting action selection (P97.09).

P97.09=0 indicates that the auto current limiting is disabled in the case of constant speed operation.

P97.09 = 1 indicates that the auto current limiting is enabled in the case of constant speed operation.

When the auto current limiting acts, the output frequency may change. For the situations requiring stable output frequency at constant speed operation, the auto current limiting function shall not be used.

When the auto current limiting is enabled, because of the low setting of the current limiting level, it may affect the overload capacity of the drive.

P97.12	Grounding short circuit detection upon power-up	0~1 (1)

0: Disable the grounding short circuit detection upon power-up

1: Enable the grounding short circuit detection upon power-up

The grounding short circuit detection upon power-up means that the drive automatically detects whether there is any grounding short circuit on the output side upon power-up. If any, the drive will display “Er.GdF” fault, which can not be reset. Please power off, troubleshoot the detected grounding short circuit on the output side and power up again. This function is available for drives of power of 7.5kW or below.

P97.13	Auto reset times	0~100 (0)
P97.14	Auto reset interval time	2.0~20.0s (5.0s)

With the fault auto reset function, the faults in the operation can be automatically reset according to the preset times and interval. When 0 is selected for the auto reset times, it indicates that auto reset is disabled, and immediate fault protection shall be triggered.

Note

1.The inverter module protection (Er.drv) and external equipment fault (Er.EFT) do not have auto reset function.

2.During the reset interval, the output is locked at zero frequency. When the auto reset is completed, it will automatically run in the speed tracking mode.

3.Be sure to use the auto fault reset function carefully, otherwise, human injury or property loss may be caused.

P97.15	The 1st fault type	0~50 (0)

P97.16	The 2nd fault type	0~50 (0)
P97.17	The 3rd fault type	0~50 (0)

P97.15 ~ P97.17 are the last three fault types, the specific type of fault please refer to function code summary table.

P97.18	DC bus voltage at the 3rd fault	0~999 (0)
P97.19	Actual current at the 3rd fault	0.0~999.9 (0.0A)
P97.20	Operation frequency at the 3rd fault	0.00~3000.00Hz(0.00Hz)
P97.21	Drive operation status at the 3rd fault	0~FFFFH(0000)
P97.22	Inveter module temperature at the 3rd fault	0.0~150.0℃(0.0℃)
P97.23	Rectifier module temperature at the 3rd fault	0.0~150.0℃(0.0℃)

P97.18 ~ P97.23 are the third (last) fault records.

P97.24	DC bus voltage at the 2nd fault	0~999 (0)
P97.25	Actual current at the 2nd fault	0.0~999.9 (0.0A)
P97.26	Operation frequency at the 2nd fault	0.00~3000.00Hz(0.00Hz)
P97.27	Drive operation status at the 2nd fault	0~FFFFH(0000)
P97.28	Inveter module temperature at the 2nd fault	0.0~150.0℃(0.0℃)
P97.29	Rectifier module temperature at the 2nd fault	0.0~150.0℃(0.0℃)

P97.24 ~ P97.29 are second fault records.

P97.30	DC bus voltage at the 1st fault	0~999 (0)
P97.31	Actual current at the 1st fault	0.0~999.9 (0.0A)
P97.32	Operation frequency at the 1st fault	0.00~3000.00Hz(0.00Hz)
P97.33	Drive operation status at the 1st fault	0~FFFFH(0000)
P97.34	Inveter module temperature at the 1st fault	0.0~150.0℃(0.0℃)
P97.35	Rectifier module temperature at the 1st fault	0.0~150.0℃(0.0℃)

P97.30 ~ P97.35 are the first fault records.

MV200 memorizes the latest 3 types of fault and records the bus voltage ,output current , running frequency, running status and the temperature of inverter module and rectifier module for the latest 3 types of fault. For the corresponding relationships of the running status, please see P01.17. The latest fault record is the record for the 3rd fault.

6.17 Drive parameters (Group P98)

P98.00	Series No.	0~FFFF (200/20A)

G-type:200

P-type:20A

P98.01	Software version No.	0.00~99.99
P98.02	User-customized version No.	0~9999
P98.03	Rated capacity	0~999.9kVA
P98.04	Rated voltage	0~999V
P98.05	Rated current	0~999.9A

The above are read-only parameters. Record the basic information of the drive. The values for P98.03~P98.05 are set by the manufacturer.

P98.06	Drive series selection	0~6

This function code is used for setting the voltage level of the drive.

0: 220V

1: 380V

2: 400V

3: 415V

4: 440V

5: 460V

6: 480V

Chapter 7 Troubleshooting

7.1 Displaying exception and solutions

All possible fault types for MV200 are summarized as shown in table 7-1. The number of the fault code is 36. Before consulting the service department, the user can perform self-check according to the hints of the table and record the fault symptoms in detail. To seek for service support, please contact the sales person.

Table 7-1 Fault record table

Fault code	Fault type	Possible fault cause	Solutions
Er.oC1	Acceleration over-current of the drive	The acceleration time is too short.	Lengthen the acceleration time
		The motor parameters are incorrect.	Perform the parameter auto-tuning of the motor
		When instantaneous stop happens, restart the rotating motor	Set the start mode P08.00 as the speed tracking restart function
		The drive power is too low.	Adopt the drive with high power class
		V/F curve is improper.	Adjust the V/F curve setting and the manual torque increase
Er.oC2	Deceleration over-current of the drive	The deceleration time is too short.	Lengthen the deceleration time
		There is potential energy load or the load inertial torque is large.	Use additionally appropriate dynamic braking components
		The drive power is low.	Adopt the drive with high power class
Er.oC3	Constant speed over-current of the drive	The acceleration/deceleration time is too short.	Lengthen the acceleration/deceleration time appropriately
		Sudden load change or abnormal load	Check the load
		Low grid voltage	Check the input power supply
		The drive power is low	Adopt the drive with high power class
Er.oU1	Acceleration over-voltage of the drive	Abnormal input voltage	Check the input power supply
		Acceleration time is too short.	Lengthen the acceleration time appropriately
		When instantaneous stop happens, restart the rotating motor	Set the start mode P08.00 as the speed tracking restart function
Er.oU2	Deceleration over-voltage of the drive	The deceleration time is too short (compared with regeneration energy).	Lengthen the deceleration time
		There is potential energy load or the load inertial torque is large.	Select appropriate dynamic braking components

Fault code	Fault type	Possible fault cause	Solutions
Er.oU3	Constant speed over-voltage of the drive	The acceleration/deceleration time is too short.	Lengthen the acceleration/deceleration time appropriately
		Abnormal input voltage	Check the input power supply
		The input voltage fluctuates abnormally	Install the input reactor
		Large load inertia	Adopt dynamic braking components
Er.IrF	Input side phase loss	There is phase loss in input R.S.T.	Check the installation wiring Check the input voltage
Er.odF	Output side phase loss	There is phase loss in output U.V.W.	Check the output wiring Check the motor and the cables
Er.drv	Power module protection	There is interphase short circuit or grounding short circuit in output three phases.	Rewiring and check if the motor insulation is good.
		Instantaneous over-current of the drive	See the over-current solutions
		The duct is blocked or the fan is damaged.	Unblock the duct or replace the fan
		The ambient temperature is too high.	Lower the ambient temperature
		The wirings or the plug-in units of the control board loosens.	Check them and rewiring
		Abnormal current waveform caused by output phase loss and so on	Check the wiring
		The auxiliary power supply is damaged; the drive voltage is insufficient.	Seek for service support
		Inverter module bridging conduction	Seek for service support
		Abnormal control board	Seek for service support
		Braking pipe damaged	Seek for service support
Er.oH1	Inverter module heatsink over-temperature	The ambient temperature is too high.	Lower the ambient temperature
		The duct is blocked.	Clean the duct
		The fan is damaged.	Replace the fan
		The inverter module is abnormal.	Seek for service support
Er.oH2	Rectifier heatsink over-temperature	The ambient temperature is too high.	Lower the ambient temperature
		The duct is blocked.	Clean the duct
		The fan is damaged.	Replace the fan

Fault code	Fault type	Possible fault cause	Solutions
Er.oL1	Drive overload	The motor parameters are incorrect.	Perform the parameter auto-tuning of the motor
		The load is too large.	Adopt the drive with higher power
		The DC braking amount is too large.	Reduce the DC braking current and lengthen the braking time
		When instantaneous stop happens, restart the rotating motor	Set the start mode P08.00 as the speed tracking restart function
		The acceleration time is too short.	Lengthen the acceleration time
		The grid voltage is too low.	Check the grid voltage
		V/F curve is improper.	Adjust V/F curve and torque increase
Er.oL2	Motor overload	The motor overload protection factor setting is incorrect.	Set the overload protection factor of motor correctly.
		The motor is blocked or the sudden change of load is too large.	Check the load
		The universal motor runs at low speed for a long time, with heavy load.	If long-term low-speed running is required, special motor should be used.
		The grid voltage is too low.	Check the grid voltage
		V/F curve is improper.	Set V/F curve and torque increase correctly
Er.EFT	Emergency stop or external device fault	Stop suddenly by pressing the STOP key	See the function definition of the STOP key in P00.04
		External fault emergency-stop terminal is enabled.	After the external fault is revoked, release the external fault terminal
Er.EEP	EEPROM read/write fault	The read/write error of the control parameters occurs.	Reset by pressing the STOP/RESET key, seek for service support
Er.SC1	Abnormal remote serial port communication	The baud rate is set improperly.	Set the baud rate properly.
		Serial port communication error	Reset by pressing the STOP/RESET key, seek for service support
		The fault alarm parameters are set improperly.	Modify the P15.03 and P97.00 settings
		The host device does not work.	Check if the host device is working and if the wiring is correct.
Er.rLy	Abnormal contactor	The grid voltage is too low.	Check the grid voltage
		The contactor is damaged.	Replace the contactor of the main circuit, seek for service support

Fault code	Fault type	Possible fault cause	Solutions
		The power-up buffer resistance is damaged.	Replace the buffer resistance, seek for service support
		The control circuit is damaged.	Seek for service support
		Input phase loss	Check the input R.S.T. wiring
Er.CUr	Current detection circuit abnormal	The wirings or the plug-in units of the control board loosens.	Check them and rewiring
		The auxiliary power supply is damaged.	Seek for service support
		The Hall device is damaged.	Seek for service support
		The amplifying circuit is abnormal.	Seek for service support
		The AI analog input voltage is too high.	Reduce the AI analog input voltage to less than 12V
Er.CPU	System interference	Severely interfered	Reset by pressing STOP/RESET key or install a power filter to the input side of the power supply
		DSP read/write error of the main control panel	Reset by pressing the STOP/RESET key, seek for service support
Er.FbL	Closed loop feedback loss	The parameters for feedback loss are set improperly.	Modify the P14.26 setting
		Feedback wire-break	Rewiring
		The reference of closed loop feedback value is too low.	See the P14.01 setting and increase the feedback reference
Er. EGL	External reference command lost	During the frequency main reference or the torque command selection analog current reference, the analog reference signal is disconnected or too low (less than 2mA).	Check the wiring or adjust the input type of the reference signal
Er.CoP	Operation panel parameter copying error	The operation panel parameters are incomplete or the operation panel version is inconsistent with main control panel version.	Refresh the operation panel data and version, use P00.06=1 for uploading the parameters first and then use P00.06=2 or 3 for downloading.
		The operation panel EEPROM is damaged.	Seek for service support
Er.TUn	Poor auto-tuning	The nameplate parameters of the motor are incorrect.	Set the parameters properly according to the motor nameplate

Fault code	Fault type	Possible fault cause	Solutions
		When reverse running is prohibited, reverse rotating auto-tuning is performed.	Cancel the reverse running prohibition
		Auto-tuning overtime	Check motor wiring
			Check the P02.16 (upper limit frequency) and see whether the P02.17 set value is lower than rated frequency.
Er.PST	Parameter setting error	Wrong analog AI function selection setting	The same function shall not be selected for different analogs simultaneously.
Er.24v	Control board 24V power short circuit	Short circuit of P24 and terminal COM	Confirm whether the wiring of P24 and COM is correct
		The interface board circuit is damaged.	Replace the interface board, seek for service support
Er.GdF	Grounding short circuit fault	One of the phases (The most likely one is phase U) is grounding short circuited.	Check the grounding short circuit of the output three phase and troubleshoot it.
Er.dEv	Too large speed deviation (DEV) fault	DEV deviation detection value setting is too low.	Modify the DEV detection value setting
		Heavy load fluctuation	Eliminate the load vibration
Er.Fbo	PID feedback exceeding limit	PID feedback value out of limited range	Check whether the feedback value input voltage is normal, if normal, seek for service support
Er.oHL	Motor over-temperature	The ambient temperature is too high.	Lower the ambient temperature
		The motor duct is blocked.	Clean the motor duct
		The motor fan is damaged.	Replace the motor fan
		The motor operates at low frequency and large load for a long time.	Add a large fan for the motor to dissipate heat
Er.AIF	Abnormal AI analog input	Abnormal control circuit	Seek for service support
		The input analog is out of the range and the absolute value is greater than 11V	Check the analog input
Er.THI	Inverter module temperature sampling disconnection	Abnormal temperature sampling circuit	Seek for service support
		The inverter module temperature sampling wire is poorly connected.	Check the inverter module temperature sampling wire connection
Er.THr	Rectifier module	Abnormal temperature sampling circuit	Seek for service support

Fault code	Fault type	Possible fault cause	Solutions
	temperature sampling disconnection	The temperature sampling wire is poorly connected.	Check the temperature sampling wire connection
Er.10v	Control board ±10V power short circuit	±10V grounding	Confirm whether the ±10V wiring is correct
		The interface board circuit is damaged.	Replace the interface board, seek for service support
Er.rEF	Abnormal internal over-current reference	The control board circuit is damaged.	Seek for service support
Er.PIL	Wrong PID limit value setting	The PID lower limit set value exceeds PID upper limit set value	Adjust the PID upper / lower limit set value

All the possible alarm types for MV200 are summarized as shown in table 7-2. For details, please refer to the group P97 function code setting. If the fault disappears automatically during the running process, the drive will also automatically reset to the status before the alarm (except AL.SC1, for details, please refer to the group P97 function code description).

Table 7-2 Alarm code table

Alarm code	Alarm type	Possible alarm causes	Solutions
AL.oL1	Drive overload	The motor parameters are incorrect.	Perform the parameter auto-tuning of the motor
		The load is too large.	Adopt the drive with higher power
		The DC braking amount is too large.	Reduce the DC braking current and lengthen the braking time
		When instantaneous stop happens, restart the rotating motor	Set the start mode P08.00 as the speed tracking restart function
		The acceleration time is too short.	Lengthen the acceleration time
		The grid voltage is too low.	Check the grid voltage
		V/F curve is improper.	Adjust V/F curve and torque increase
AL.oL2	Motor overload	The motor overload protection factor setting is incorrect.	Set the overload protection factor of motor correctly.
		The motor is blocked or the sudden change of load is too large.	Check the load
		The universal motor runs at low speed for a long time, with heavy load.	If long-term low-speed running is required, special motor should be used.
		The grid voltage is too low.	Check the grid voltage

Alarm code	Alarm type	Possible alarm causes	Solutions
		V/F curve is improper.	Set V/F curve and torque increase correctly
AL.EEP	EEPROM read/write fault	The read/write error of the control parameters occurs.	Reset by pressing the STOP/RESET key, seek for service support
AL.SC1	Abnormal serial port communication	The baud rate is set improperly.	Set the baud rate properly.
		Serial port communication error	Reset by pressing the STOP/RESET key, seek for service support
		The fault alarm parameters are set improperly.	Modify the P15.03 and P97.00 settings
		The host device does not work.	Check if the host device is working and if the wiring is correct.
AL.rLy1	Abnormal contactor	The grid voltage is too low.	Check the grid voltage
		The contactor is damaged.	Replace the contactor of the main circuit, seek for service support
		The power-up buffer resistance is damaged.	Replace the buffer resistance, seek for service support
		The control circuit is damaged.	Seek for service support
		Input phase loss	Check the input R.S.T. wiring
AL.FbL	Closed loop feedback loss	The parameters for feedback loss are set improperly.	Modify the P14.26 setting
		Feedback wire-break	Rewiring
		The reference of closed loop feedback value is too low.	See the P14.01 setting and increase the feedback reference
AL.EGL	External reference command lost	During the frequency main reference or the torque command selection analog current reference, the analog reference signal is disconnected or too low (less than 2mA).	Check the wiring or adjust the input type of the reference signal
AL.24v	Control board 24V power short circuit	Short circuit of P24 and terminal COM	Confirm whether the wiring of P24 and COM is correct
		The interface board circuit is damaged.	Replace the interface board, seek for service support
AL.Fbo	Closed loop feedback loss	The parameters for feedback loss are set improperly.	Modify the P14.26 setting

Alarm code	Alarm type	Possible alarm causes	Solutions
AL.PIL	Wrong PID limit value setting	The PID lower limit set value exceeds PID upper limit set value	Adjust the PID upper / lower limit set value

WARNING
Please carefully choose the fault alarm function; otherwise, the accident range extension, the human injury and the property damage may be caused.

7.2 Operation exception and solutions

Table 7-3 Operation exception and solutions

Symptoms	Conditions	Possible causes	Solutions
The operation panel has no response.	An individual key or each key has no response.	The locking function of the operation panel takes effect.	In stop or running status, press the ENTER/DATA key and retain pressure on it, then press the V key successively for three times, after that, you can unlock it.
			Completely power off the drive and then power it up
		The wires of the operation panel have poor contact.	Check the wires and perform the hot plug again
		The keys of the operation panel are damaged.	Replace the operation panel or seek for service support
The function code can not be modified.	Can not be modified in running status	The function code can not be modified in running status.	Modify it in the stop status
	A portion of function code can not be modified.	The function code P00.03 is set as 1 or 2.	Set the P00.03 as 0
		The function code is actual detection value.	Actual parameters can not be changed by users.
	There is no response when MENU/ESC key is pressed.	The locking function of the operation panel takes effect or others.	See the solutions to “the operation panel has no response”
	Can not enter the editing state after pressing the MENU/ESC key; the function code status display is 0000.	User password is set.	Input the user password correctly
			Seek for service support

Symptoms	Conditions	Possible causes	Solutions
The drive stops unexpectedly during operation.	In the case that there is no stop command, the drive stops automatically and the run LED is off.	Fault alarm occurs.	Find out the fault causes and reset the fault
		A single cycle of the simple PLC is completed.	Check the PLC parameter setting
		There is power supply interruption.	Check the power supply
		Running command channel switches	Check the relevant function code setting of the operation and running command channel
		Too large DEV	Modify the DEV detection value setting
		The positive/negative logic of the control terminals changes.	Check if the P09.15 setting corresponds with the requirements
	In the case that there is no stop command, the motor stops automatically and the drive run indicator light is on (running at zero frequency).	Fault resets automatically.	Check the fault auto reset setting and find out the fault causes
		Simple PLC pause	Check PLC pause functional terminal
		External interrupt	Check the external interrupt setting and find out the fault source
		The set frequency is 0.	Check the set frequency
		The startup frequency is higher than the set frequency.	Check the startup frequency
		There is something wrong with the skip frequency setting.	Check the skip frequency setting
		The closed loop output is negative when the reverse running is prohibited.	Check the P14.22 and the P08.18 setting
		Enable the “disabling forward run” terminal during forward run process	Check the terminal function setting
		Enable the “disabling reverse running” terminal during reverse running process	Check the terminal function setting
		The frequency adjustment setting is 0.	Check the P02.11 and the P02.12 setting
		Transient low-voltage compensation is applied when power-fault restart and the power supply voltage is too low.	Check the power-fault restart function setting and the input voltage
The drive does not	The drive does not work after the run key	The terminal with the coast-to-stop function is enabled.	Check the coast-to-stop terminal

Symptoms	Conditions	Possible causes	Solutions
work.	is pressed and the running LED is off.	The “disabling run” terminal of the drive is enabled.	Check the “disabling run” terminal of the drive
		The terminal with the external stop function is enabled.	Check the terminal with the external stop function
		Under the three-wire control mode, the terminal with the three-wire operation control function is not closed.	Set and close the three-wire operation control terminal
		Fault alarm occurs.	Troubleshoot
		The virtual terminal function of the host device is set improperly.	Cancel the virtual terminal function of the host device or set the function properly through the host device, or modify the P09.16 setting
		The forward/reverse logic of the input terminal is set improperly.	Check the P09.15 setting
When the drive is started, the report -LU- runs immediately .	The thyristor or the contactor disconnects and the drive load is large.	Since the thyristor or the contactor is not closed, when the drive runs with large load, the DC bus voltage of the main circuit will drop; the drive will display -LU- first and will not display Er.JCF fault.	Run the drive after the thyristor or the contactor is closed completely

Chapter 8 Maintenance

The influence of the ambient temperature, humidity, dust and vibration as well as the aging devices in the drive may cause the drive faults. Thus, it is necessary to carry out daily and periodical maintenance.

8.1 Daily maintenance

Note

Before inspection and maintenance, please confirm the following items first. Otherwise, electric shock may occur.

1. The power supply of the drive has been cut off.
2. Ensure that the charging LED lamp is off .
3. The voltage between terminals (+DC)and terminals (-DC)measured by DC high-voltmeter should be below 36V.

The drive should be working in the environments stipulated in Section 2.1. In addition, there may be some unexpected situations during the operation, so users should carry out daily maintenance according to the instructions in the following table. The effective ways to prolong the service life of the drive is to maintain a good operating environment, record daily operating data and discover the cause of abnormity as early as possible.

Table 8-1 Instructions for daily inspection

Inspection items	Inspection essentials			Judgment standard
	Inspection contents	Cycle	Inspection means	
Operating environment	1. Temperature and humidity	Anytime	1. Temperature meter and hygrometer	1. -10℃~+40℃, derating is required at 40℃~50℃
	2. Dust, water and drop leak		2.Visual detection	2. No signs of drop of water and drop leak
	3. Odor		3. Smell	3. No strange smell
Drive	1. Vibration and heat generation	Anytime	1. Touch	1. The vibration is normal and stable. The temperature of the enclosure and the operating of the fan is normal.
	2. Noise		2. Hear	2. No abnormal sound
Motor	1. Heat generation	Anytime	1. Touch by hand	1. Generating heat without any exception
	2. Noise		2. Hear	2. Low and regular noise
Running status	1. Output current	Anytime	1. Current meter	1. Within the rated range and three-phase equilibrium

	2. Output voltage		2. Voltmeter	2. Within the rated range and three-phase equilibrium
	3. Internal temperature		3. Thermometer	3. The difference with the ambient temperature is less than 35℃

8.2 Periodical maintenance

The users may carry out periodical maintenance of the drive once every 3 or 6 months according to the operating environment.

Note

1. Only the specially trained professionals are allowed to dismantle, maintain and replace parts of the device.
2. Do not leave any screws or washers in the machine, otherwise, device damage may be caused.

General inspection details:

1. Check if the screws of the control terminal are loose. If so, use the screwdriver to fasten them.
2. Check if the main circuit terminals are properly connected and the connection part of copper bus is over heated.
3. Check if there are any damage to the power cables and the control cables and check particularly whether there are any wear on the cable sheath.
4. Check if the insulating tapes around the power cable lugs are stripped.
5. Clean out the dust on the circuit board and the duct. It is better to use the dust collector.
6. Before testing the grounding insulating performance of the drive, please short circuit all the input and output terminals (R/L1, S/L2, T/L3, U/T1, V/T2, W/T3, P/B1, B2, +DC and -DC) of its main circuit terminals first and then conduct the grounding test. It is prohibited to conduct the grounding test for a single terminal; otherwise, the drive may be damaged. Please use 500V Mega-Ohm-Meter in the test.
7. To test the insulating performance of the motor, please test the motor independently after disconnecting the input terminals U/T1, V/T2 and W/T3 of the motor from the drive; otherwise, the drive may be damaged.

Note

1. The drive has passed the dielectric strength test before delivery. Thus, you should not conduct the test again, improper test may damage the drive.
2. Be sure to replace the original components in the drive with the same model and same electric parameters; otherwise, the drive may be damaged!

8.3 Replacing wearing parts

The wearing parts of the drive include cooling fan and filter electrolytic capacitor, whose service life depends on the operating environment and maintenance status. The common service life is listed in the table below.

Table 8-2 Component life

Part name	Service Life
Fan	30,000~40,000 hours
Electrolytic capacitor	40,000~50,000 hours
Relay	About 100,000 times

Users can determine the replacement time according to the running time.

1. Cooling fan

Possible damage causes: wear of the bearing, aging of the vanes.

Judgment standard: whether there is crack on the blade and whether there is any abnormal vibration or noise.

2. Electrolytic capacitor

Possible damage causes: high ambient temperature, increased pulsating current caused by rapid changing load, electrolyte aging.

Judgment standard: whether there is liquid leakage, whether the safety valve has protruded, measure the static capacitance, measure the insulating resistance.

3. Relay

Possible damage caused: erosion, frequent actions.

Judgment standard: whether it can be opened and closed properly.

8.4 Storage of drive

Note the following for the temporary and long-term storage of the drive:

1.The drive should be stored in the places away from high temperature, dampness, dust and metal powder. There should be good ventilation there.

2.Long-term storage will degrade the electrolytic capacitor. The drive should be powered on once within 2 years at least for 5 hours. The input voltage should be raised slowly to the rated value with the regulator upon power-up.

Appendix 1 Modbus Communication Protocol

1. Networking mode

The drive has two networking modes: single host/multiple slaves mode and single host/single slave mode.

2. Interface mode

RS485 interface: asynchronous and half-duplex. Default: 1-8-N-2, 9600bps, RTU. Refer to Group P15 function code for the parameter setting.

3. Communication mode

1.The communication protocol of the drive is Modbus protocol, which does not only support common register reading and writing, but also expands some commands to manage the drive function codes.

2.The drive is slave, adopting host/salve mode P2P communication. The drive will not response to the command sent by the host via broadcast address.

3.In multiple units communication or long-distance communication, parallel connecting the resistance of 100 to 120 ohms with the positive end and negative end of the communication signal line of the host station can enhance its immunity to interference.

4.MV200 provides RS485 interface only. If the communication interface of the external equipment is RS232, the RS232/RS485 conversion equipment is needed.

4. Protocol format

Modbus protocol supports both RTU mode and ASCII mode, and the corresponding frame format is as shown in the Attached Fig.1-1.

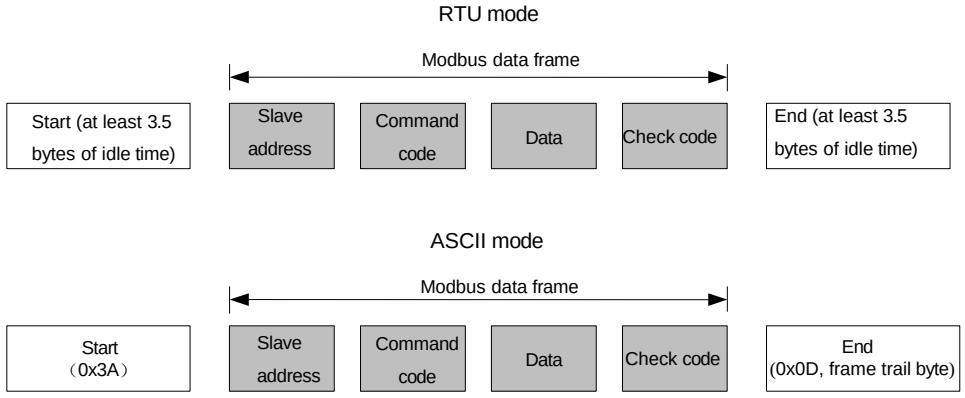

Attached Fig.1-1 Modbus protocol format

Modbus adopts the ”Big Endian” encoding mode, which sends the high bytes first and then sends the low bytes.

1. RTU mode

In RTU mode, the larger value between the function code setting value and the Modbus internal convention value shall be selected as the idle time between frames. The minimum idle time value between frames under the Modbus internal convention is as follows: the idle time that the frame head and frame trail pass the bus shall not be less than that of 3.5 bytes to define the frame. The data verification adopts CRC-16 and the verify checksum includes the whole information. The high and low bytes of the checksum can only be sent after their exchanging. Please refer to the example after the protocol for the detailed CRC verification. Please note: At least 3.5 characters of the BUS idle time shall be kept between the frames and it doesn't need to accumulate the start and end idle time.

In the sample below, it is used to read the parameters of the internal register 0101 (P01.01) of No.5 slave in the RTU mode.

Request frame:

Slave address	Command code	Data				Check code	
		Register address		Number of bytes read			
0x05	0x03	0x01	0x01	0x00	0x01	0xD5	0xB2

Response frame:

Slave address	Command code	Data			Check code	
		Number of bytes responded	Register content			
0x05	0x03	0x02	0x13	0x88	0x44	0xD2

In the above table, the check code is the CRC verification value. Please refer to the following text for the computing method of the CRC verification.

2. ASCII mode

In the ASCII mode, the frame header is “0x3A” and the frame trail is “0x0D, 0x0A” by default. The frame trail can be set by the user as well. In this mode, except for the frame header and frame trail, all the other data bytes are sent in the ASCII code mode. The 4 high bytes will be sent first, and then the 4 low bytes. In the ASCII mode, the dada has 7 bytes. For “A” to “F”, their capital letter in the ASCII code will be used. The data is verified by the LRC and the verification involves information from slave address to data. The checksum is equivalent to the complement of the character sum of all the data in the check.

The following example shows writing 4000 (0xFA0) into the internal register 0201 (P02.05) of No.5 slave in the ASCII mode.

Request frame:

	Frame head	Slave address		Command code		Data								Check code		Frame trail	
						Register address				Written content							
Character	:	0	5	0	6	0	2	0	1	0	F	A	0	4	3	CR	LF
ASCII	3A	30	31	30	36	30	32	30	31	30	46	41	30	34	33	0D	0A

In the above table, the check code is the LRC checksum, which is equivalent to the complement of "05+06+02+01+0x0F+0xA0".

Response frame:

	Frame head	Slave address		Command code		Data								Check code		Frame trail	
						Register address				Written content							
Character	:	0	5	0	6	0	2	0	1	0	F	A	0	4	3	CR	LF
ASCII	3A	30	31	30	36	30	32	30	31	30	46	41	30	34	33	0D	0A

With the function codes, the drive can set different response delays to meet the specific application demands of various host stations. For the RTU mode, the actual time of response delay shall be not less than the interval of 3.5 characters; and for the ASCII mode, the actual time of response delay shall be not less than 1ms.

5. Protocol functions

The main function of Modbus is reading/writing parameters. Different command codes determine different operation requests. The Modbus protocol of MV200 drive supports the operations as shown in the following table:

Command code	Meaning
0x03	Reading the drive parameters, including function code parameters, control parameters and status parameters.
0x06	Change the single 16-byte function code parameter or control parameter of the drive, and the parameter value will not be saved after power off.
0x08	Line diagnosis.
0x10	Change multiple function code or control parameters of the drive, and the parameter value will not be saved after power off.
0x41	Change the single 16-byte function code parameter or control parameter of the drive, and the parameter value will be saved after power off.
0x42	Manage the drive function codes.
0x43	Change multiple function code or control parameters of the drive, and the parameter values will be saved after power off.

All the function code parameters, control parameters and status parameters of the drive are mapped as the read/write registers of Modbus. The read/write features and range of the function code parameter follow the drive user manual. The group number of the drive function code is mapped as the high byte of the register address and the group internal index (i.e. the serial number of the parameter in the group) is mapped as the low byte of the register address. The control parameter and status parameter of the drive are virtual function code groups of the drive. The correspondence between the group numbers of the function codes and the high bytes of the register address mapped are as shown in the following table:

Drive parameter group	High byte of the address mapped	Drive parameter group	High byte of the address mapped
Group P00	0x00	Group P14	0x0E
Group P01	0x01	Group P15	0x0F
Group P02	0x02	Group P16	0x10
Group P03	0x03	Group P40	0x28
Group P07	0x07	……	……
Group P08	0x08	Group P97	0x61
Group P09	0x09	Group P98	0x62
Group P10	0x0A	Group P99	0x63
Group P11	0x0B	Control parameter group	0x64
Group P12	0x0C	Status parameter group	0x65
Group P13	0x0D	……	……

For example, the register address of the function code parameter P03.02 of the drive is 0x0302, and the register address of the first control parameter (control word 1) is 0x6400.

As the format of the whole data frame has been detailed in the above text, the following text will focus on the format and meanings of the “command code” and “data” of Modbus protocol. These two parts constitute the Modbus application layer protocol data unit. Any reference to application layer protocol data unit to below refers to such two parts. The following introduction to the frame format is based on RTU mode. For the ASCII mode, the length of the application-layer protocol data unit shall be doubled.

1. Read the drive parameters

The application-layer protocol data units are as follows.

Request format:

Application-layer protocol data unit	Data length (number of bytes)	Value or range
Command code	1	0x03
Start register address	2	0x0000~0xFFFF
Number of registers	2	0x0001~0x000A

If the operation is successful, the response frame is as follows:

Application-layer protocol data unit	Data length (number of bytes)	Value or range
Command code	1	0x03
Number of bytes read	1	2 * Number of registers
Content read	2 * Number of registers	Parameter value

If the operation fails, it will return to the abnormal response frame. The abnormal response frame includes the error code and exception code. In which, the error code = (command code + 0x80), and the exception code indicates the error cause.

Abnormal response frame format:

Application-layer protocol data unit	Data length (number of bytes)	Value or range
Error code	1	(Command code + 0x80)
Exception code	1	

The exception codes and their meanings are as follows:

Exception code	Meaning
0x01	Invalid command code
0x02	Invalid register address.
0x03	Data error (the data is not within the upper/lower range).
0x04	Slave operation failure (including the error caused by that the data is within the upper/lower range, but it is invalid).
0x05	The command is valid and in process (It is mainly used to save the data into the nonvolatile memory cell).
0x06	The salve is busy, please try again later. It is mainly used to save the data into the nonvolatile memory cell.
0x16	Operation not supported (mainly refer to the control parameter and status parameter, for example, do not support reading the property, leave-factory value and upper/lower limit)
0x17	The number of registers in the request frame is wrong (for example, when the operation is 32-byte, the number of bytes is odd).
0x18	Information frame error (including information length error and verification error).
0x20	Parameters cannot be changed.
0x21	Parameters cannot be changed during the drive running.
0x22	Password required for parameters.

2. Change the single 16-byte function code parameter and status parameter of the drive, and the parameter values will not be saved after power off.

When this command is used, the parameter value changed will not be saved upon power on after power off.

The application-layer protocol data units are as follows.

Request format:

Application-layer protocol data unit	Data length (number of bytes)	Value or range
Command code	1	0x06
Register address	2	0x0000~0xFFFF
Register content	2	0x0000~0xFFFF

If the operation is successful, the response frame is as follows:

Application-layer protocol data unit	Data length (number of bytes)	Value or range
Command code	1	0x06

Register address	2	0x0000~0xFFFF
Register content	2	0x0000~0xFFFF

If the operation is failed, it will return to the abnormal response frame and its format is as shown above.

3. Line diagnosis

The application-layer protocol data units are as follows.

Request format:

Application-layer protocol data unit	Data length (number of bytes)	Value or range
Command code	1	0x08
Sub-command code	2	0x0000~0x0030
Data	2	0x0000~0xFFFF

If the operation is successful, the response frame is as follows:

Application-layer protocol data unit	Data length (number of bytes)	Value or range
Command code	1	0x08
Sub-command code	2	0x0000~0x0030
Data	2	0x0000~0xFFFF

If the operation is failed, it will return to the abnormal response frame and its format is as shown above.

The sub-command code values supported by the line diagnosis and their meanings are as shown in the following table:

Sub-command code	Data (request)	Data (response)	Function
0x0001	0x0000	0x0000	Reinitialize the communication: make the no-response mode become disabled
	0xFF00	0xFF00	Reinitialize the communication: make the no-response mode become disabled
0x0003	The high byte is “new frame trail” and the low byte is “00”.	The high byte is “new frame trail” and the low byte is “00”.	Setting the frame trail of ASCII mode, and the “new frame trail” will replace the original line feeds and it will not be saved if power off (the value of “new frame trail” can neither exceed 0x7F, nor equal to 0x3A).
0x0004	0x0000	No response	Setting the no-response mode. In this mode, the slave only respond to “the request of reinitializing the communication” (the request of sub-command code 0x0001), and it will not process or response any other requests. This function is mainly used to isolate the slave with fault.
0x0030	0x0000	0x0000	Setting the slave not to respond to invalid or wrong commands.

Sub-command code	Data (request)	Data (response)	Function
	0x0001	0x0001	Setting the slave to respond to invalid and wrong commands.

4. Change multiple function code parameters and control parameters of the drive, and the parameter values will not be saved after power off. When this command is used, the parameter value changed will not be saved upon power on after power off.

The application-layer protocol data units are as follows.

Request format:

Application-layer protocol data unit	Data length (number of bytes)	Value or range
Command code	1	0x10
Start register address	2	0x0000~0xFFFF
Number of registers in operation	2	0x0001~0x000A
Number of bytes of register content	1	2 * Number of registers in operation
Register content	2 * Number of registers in operation	

If the operation is successful, the response frame is as follows:

Application-layer protocol data unit	Data length (number of bytes)	Value or range
Command code	1	0x10
Start register address	2	0x0000~0xFFFF
Number of registers in operation	2	0x0001~0x000A

This command is used to change the content of the continuous data cells from the start register address. If the operation is failed, it will return to the abnormal response frame and its format is as shown above.

5.Change single 16-byte function code parameters and status parameters of the drive, and the parameter values will be saved after power off. The command code 0x41 is used to change the single 16-byte function code parameters or control parameters of the drive, and store the value into the nonvolatile memory cell. Its command format is the same as that of 0x06. The only difference is as follows: the parameter value changed under the 0x06 command will not be saved upon power off, but the parameter value changed under the 0x41 command will be saved upon power off.

6. Manage the drive function codes

The management of the drive function codes includes reading the upper/lower limit of the parameter, reading the parameter features, reading the maximum group internal index of the function code menu, reading the next/previous function group number, reading current display status parameter index, displaying the next status parameter and reading the factory-leave value of the function code parameter.The parameter features include the read/write features, units and scaling relations of the parameter.

The application-layer protocol data units are as follows.

Request format:

Application-layer protocol data unit	Data length (number of bytes)	Value or range
Command code	1	0x42
Sub-command code	2	0x0000~0x0008
Data	2	Depends on the drive type

If the operation is successful, the response frame is as follows:

Application-layer protocol data unit	Data length (number of bytes)	Value or range
Command code	1	0x42
Sub-command code	2	0x0000~0x0008
Data	2 or 4	0x00000000~0xFFFFFFFF

If the operation request is failed, the response will be error code and exception code. If the operation is failed, the abnormal response will occur. Please refer to the above text for the abnormal response codes.

The values and meanings of sub-command codes supported by the function code management are as shown in the following table:

Sub-command code	Data (request)	Data (response)	Function
0x0000	The parameter group number and group internal index occupies the high byte and the low byte respectively	The upper limit value of the parameter (4-byte)	Read the upper limit value of the parameter (the status parameter does not support this)
0x0001	The parameter group number and group internal index occupies the high byte and the low byte respectively	The lower limit value of the parameter (4-byte)	Read the lower limit value of the parameter (the status parameter does not support this)
0x0002	The parameter group number and group internal index occupies the high byte and the low byte respectively	Parameter features (refer to the list of parameter features for their detailed meanings)	Read the features of the function code parameter (the control parameter and status parameter do not support this)
0x0003	The parameter group number occupies the high byte and the low byte is “00”.	Number of parameters in this group	Read the number of parameters in this group
0x0004	The parameter group number occupies the high byte and the low byte is “00”.	The high byte is the group number of next parameter group and the low byte is “00”	Read the group number of next parameter group
0x0005	The parameter group number occupies the high byte and the low byte is “00”.	The high byte is the group number of previous parameter group and the low byte is “00”	Read the group number of previous parameter group

Sub-command code	Data (request)	Data (response)	Function
0x0006	0x6500	Current status parameter index	Read the current status parameter index (please refer to the definition of the status parameter group for its meaning)
0x0007	0x6500	Next status parameter index	Read the next status parameter (please refer to the definition of the status parameter group for its meaning)
0x0008	The parameter group number and group internal index occupies the high byte and the low byte respectively	Leave-factory value of the parameter	Read the leave-factory value of the function code parameter (the control parameter and status parameter do not support this)

In the above table, when reading the upper/lower limit value, the data returned is 32 bits long, i.e. 4 bytes. The status parameter does not support this operation. The upper/lower limit value read here is that may be reached by the corresponding function code parameter. If the value range of the parameter is limited by other function code parameters (i.e. having associated function code parameters), it needs to combine the values of associated function code parameters.

Unless otherwise specified, the length of data of the response frame is 2 bytes.

The length of the function code parameter feature is 2 bytes and its bit definition is as follows:

Bit	Features	Value	Meaning
BIT0	Upper limit	0	Decimal system limit
		1	Hexadecimal system limit
BIT3~BIT1	Decimal point	000	No decimals
		010	One decimal
		010	Two decimals
		011	Three decimals
		100	The step length is 2.
		101	The step length is other value.
		Others	Reserved
BIT5~BIT4	Change properties	00	Actual parameter value, unchangeable
		01	Can be changed in the operation
		10	Cannot be changed in the operation or it is set by the manufacturers, cannot be changed by users
		11	Reserved

Bit	Features	Value	Meaning
BIT8~BIT6	Display unit	000	No unit
		001	The unit is Hz
		010	The unit is A
		011	The unit is V
		100	The unit is r/min
		101	The unit is line speed (m/s)
		110	The unit is percentage (%)
		Others	Reserved
BIT9	Reserved		
BIT10	Restore to leave-factory value	1	Restore
		0	Do not restore
BIT11	Quick menu	1	Enabled
		0	Disabled
BIT12	Basic menu	1	Enabled
		0	Disabled
BIT13	16-bit/32-bit parameter	1	32-bit
		0	16-bit
BIT15~BIT14	Reserved		

7. Change multiple function code parameters and status parameters of the drive, and the parameter values will be saved after power off.

The command code 0x43 is used to change multiple function code parameters or control parameters of the drive, and store the values into the nonvolatile memory cell.

Its command format is the same as that of 0x10. The only difference is as follows: the parameter value changed under the 0x10 command will not be saved upon power off, but the parameter value changed under the 0x43 command will be saved upon power off.

6. Control parameters and status parameters of drive

The control parameters of the drive can realize the start, stop, running frequency setting and other functions of the drive. Inquiring the status parameters of the drive can get the parameters like the running frequency, output current and output torque of the drive, etc.

1. Control parameters

The control parameters of the drive are as shown in the following table:

Register address	Parameter name	Save upon power off	Remarks
0x6400	Control word 1	No	Refer to its bit definition list
0x6401	Main reference	No	Main reference frequency; the main reference channel uses serial communication, and whether it can be saved is dependent on the setting of P02.06
0x6402	Running frequency reference	No	Same as above
0x6403	Digital process closed loop reference	Yes	Enabled when the process closed loop is enabled
0x6404	Pulse process closed loop reference (reserved)		
0x6405	Analog output AO1 setting	No	Enabled when P10.23=14
0x6406	Reserved		
0x6407	Digital output DO setting	No	Enabled when P09.29=17
0x6408	Frequency proportion setting (reserved)		
0x6409	Virtual terminal control setting	No	BIT0~BIT5: X1~X6, the corresponding bit selection and channel of P09.16 is enabled BIT10~BIT12: When Y1/Y2/RO1 P09.18~P09.20=17, the corresponding terminal is enabled.
0x640A	Setting acceleration time 1	Yes	
0x640B	Setting deceleration time 1	Yes	
0x640C	Auxiliary frequency reference	No	Enabled when the auxiliary reference channel is serial port communication and the auxiliary reference is in valid bit (controlling BIT2 of character 2)
0x640D~0x640E	Reserved		
0x640F	Expansion analog output ExAO setting (reserved)	No	Four expansion analog outputs: ExAO1~ExAO4, when P27.20/ P27.24/ P27.28/ P27.22 =14, the corresponding output is enabled
0x6410	Expansion virtual digital input terminal (reserved)	No	BIT0~BIT5:EX1~EX6, the corresponding bit selection and channel of P28.08 is enabled
0x6411	Expansion virtual digital output terminal (reserved)	No	BIT0~BIT1:ExRO1、ExRO2，when P26.09/ P26.11=17, the corresponding terminal is enabled

Register address	Parameter name	Save upon power off	Remarks
0x6412	Control word 2	No	Refer to its bit definition list

Note

1. When reading the control parameter, the value returned is the value written in the previous communication;
2.In the control parameters, the maximum length of “main reference”, “running frequency setting” and “auxiliary frequency setting” is 32 bits, and for the others, the length is 16 bits;
3.In the control parameters, for the scaling of each reference, input/output setting range and decimal point, please refer to the corresponding function code parameter.

The bit definition of the control word 1 is as shown in the following table:

Bit	Value	Function	Remarks
BIT2~BIT0	111B	Stop for external fault	Coast to stop and the drive displays external fault
	110B	Stop in mode 1	Coast to stop
	101B	Stop in mode 0	Stop according to the deceleration time set (enabled when the jog is disabled)
	100B	Running commands	Start the drive (enabled when the jog is disabled)
	Others	No command	
BIT3	1	Run reversely	Set the running direction when the running command is valid
	0	Run forward	
BIT4	1	Enable acceleration/deceleration	BIT0~BIT3, BIT7~BIT8 of control character 1 will be enabled only when this bit is enabled
	0	Disable acceleration/deceleration	
BIT5	1	The control character 1 of the host device is valid	The select bit for the validity of the control character 1 of the host device
	0	The control character 1 of the host device is disabled	
BIT6	0	Reserved	
BIT7	1	Jog forward	When both jog forward and reversely are valid, it does not run; when both are disabled, the jog will stop.
	0	The “jog forward” is disabled	
BIT8	1	Jog reversely	
	0	The “jog reversely” is disabled	
BIT9	1	The fault reset is valid	The select bit for the validity of the

Bit	Value	Function	Remarks
	0	The fault reset is disabled	fault reset of the host device
BIT15~BIT10	0	Reserved	

Note

1.The control command (control words 1 and 2) of the host device is valid only when the value of “running command channel selection” is “communication command”; the overall word 1 is valid only when its BIT5 is valid; BIT0~BIT3, BIT7~ BIT8 are valid only when its BIT4 is valid.

2.The host device processes the faults and alarms as follows: when the drive meets faults, for control words 1 and 2, only the fault reset command is valid, any other commands from the host device are disabled. That is, the host device shall reset the fault first before sending any other commands. When the alarm occurs, the control character is valid.

The bit definition of “expansion analog output ExAO setting (0x6410)” is as follows (reserved):

Bit	Value	Function	Remarks
BIT11~BIT0		Expansion analog output ExAO setting value	
BIT13~BIT12	00	ExAO1	Expansion analog output channel selection
	01	ExAO2	
	10	ExAO3	
	11	ExAO4	
BIT15~BIT14	0	Reserved	

The bit definition of the control word 2 is as shown in the following table:

Bit	Value	Function	Remarks
BIT0	1	The control character 2 of the host device is valid	The select bit for the validity of the control character 2 of the host device
	0	The control character 2 of the host device is disabled	
BIT1	1	Drive running disabled	The select bit for enabling/disabling the drive running
	0	Enable the drive running	
BIT2	1	Running (the direction depends on the function code)	
	0	Other status of running (see control character 1)	
BIT15~BIT3	0	Reserved	

Note

The overall word 2 is valid only when its BIT0 is valid.

2. Status parameters

Register address	Parameter name	Remarks
0x6500	Status word 1 of drive	
0x6501	Actual running value of current main reference	Current running frequency
0x6502	Slave model	
0x6503	Drive series number	
0x6504	Software version	
0x6505	Current running frequency	
0x6506	Output current	
0x6507	Output voltage	
0x6508	Output power	
0x6509	Rotating speed in running	
0x650A	Line speed in running	
0x650B	Analog process closed loop feedback	
0x650C	Bus voltage	
0x650D	Reserved	
0x650E	Output torque	
0x650F	Status of digital input/output terminal	BIT0~BIT5: X1~X6; BIT10~BIT12: Y1/Y2/RO1
0x6510	Reserved	
0x6511	Running frequency after compensation	
0x6512	The 1st running fault	
0x6513	The 2nd running fault	
0x6514	The 3rd (the latest one) running fault	
0x6515	Setting running frequency	
0x6516	Setting rotating speed	
0x6517	Setting analog process closed loop	
0x6518	Setting line speed	
0x6519	AI1	
0x651A	AI2	
0x651B	Setting length (reserved)	
0x651C	Setting acceleration time 1	
0x651D	Setting deceleration time 1	

Register address	Parameter name	Remarks
0x651E	Command reference channel (the same as function code P02.02)	
0x651F	Status word 2 of drive	
0x6520	Frequency reference channel (the same as function code P02.04)	
0x6521	Accumulating length (reserved)	
0x6522	Motor and mode selection(reserved)	
0x6523	Bus voltage at the 3rd fault	
0x6524	Actual current at the 3rd fault	
0x6525	Operation frequency at the 3rd fault	
0x6526	Drive operation status at the 3rd fault	The bit definition is the same as that of the status word 3.
0x6527	Reserved	
0x6528	Status word 3 of drive	

Note

1. The status parameter does not support the writing operation.

2.The encoding rules for the slave models are as follows: for the range from 0 to 9999, the hundreds and thousands are used to identify different drive series, such as AD, MV, etc. The tens and units are used to identify drive series like 100 Series, 200 Series, 300 Series and 600 Series. For example, the slave model of ADXXX Series drive is 0*1000+0*100+XXX/10; and the slave model of MVXXX Series drive is 1*1000+0*100+XXX/10.

3.In the status parameter, the maximum length of “actual running value of current main reference”, “current running frequency”, “running frequency setting” and “running frequency at the 3rd fault” is 32 bits, and for the others, the length is 16 bits.

The bit definition of the status word 1 of the drive is as shown in the following table:

Bit	Value	Function	Remarks
BIT0	1	Enable serial port control	
	0	Disable serial port control	
BIT1	1	Drive runs	
	0	Drive stops	
BIT2	1	Drive runs reversely	
	0	Drive runs forward	
BIT3	1	Enable serial port reference	

Bit	Value	Function	Remarks
	0	Disable serial port reference	
BIT4	1	Meet the main setting	
	0	Does not meet the main setting	
BIT5	1	fault	If the value is 1, it means there is a fault. Please refer to BIT15~BIT8 of status word 1 to identify the current fault type.
	0	No fault	
BIT6	1	Alarm	If the value is 1, it means there is an alarm. Please refer to BIT15~BIT8 of status word 1 to identify the current alarm type.
	0	No alarm	
BIT7	0	Reserved	
BIT15~BIT8	0x00~0xFF	Fault or alarm code	0: No fault or alarm; Not 0: it means there is a fault or alarm, you need to consider both the status of BIT5 and BIT6 to identify if it is a fault or alarm code. Please refer to P97.15 for the fault and alarm types.

The bit definition of the status word 2 of the drive is as shown in the following table:

Bit	Value	Function	Remarks
BIT0	1	Common running	
	0	Non-common running	
BIT1	1	Jog running	
	0	Non-jog running	
BIT2	1	PLC running	
	0	Non-PLC running	
BIT3	1	Multiple frequency running	
	0	Non-multiple frequency running	
BIT4	1	Process closed loop running	
	0	Non-process closed loop running	
BIT5	1	Swing frequency (reserved)	
	0	Non-swing frequency (reserved)	
BIT6	1	Under-voltage	
	0	Normal voltage	

BIT7		Reserved	
BIT8		Reserved (servo running)	
BIT9		Reserved (customized running)	
BIT10		Reserved (synchronized speed running)	
Others		Reserved	

The bit definition of the status word 3 of the drive is as shown in the following table:

Bit	Value	Function	Remarks
BIT0~BIT1		Reserved	
BIT2		Running at zero speed	
BIT3		Accelerating	
BIT4		Decelerating	
BIT5		Running at constant speed	
BIT6		Pre-exciting	
BIT7		Setting	
BIT7		Setting	
BIT8		Limiting over-current	
BIT10~ BIT11		Reserved	
BIT12		Drive fault	
BIT13~BIT15		Reserved	

7. Expand access mode

The standard protocol only supports the register of 16 bits, and the above description is also based on the register of 16 bits. The parameters of MV200 series drive include both 16 bits (single character) and 32 bits (double characters). So, the data of both lengths shall be considered when reading/writing the parameters.

There are two modes in which the drive parameters are accessed to, including 16-bit mode and 32-bit mode, that is, the user can read/write the parameters with 16 bits or 32 bits as the unit separately. The 16-bit mode and 32-bit mode are identified through the “start register address” of the request frame. If the highest byte of the address is 0, the reading/writing shall be done in the 16-bit mode, otherwise, they shall be done in the 32-bit mode. As shown in the following table.

Start register address		Access mode	Remarks
BIT15	BIT14~BIT0		
0	Actual address of the start parameter	16-bit	
1	Actual address of the start parameter	32-bit	

When accessing to the parameters in the 32-bit mode, as the unit of the register of the request frame is 16 bits and each parameter of 32 bits needs two registers of 16 bits, the “number of registers” shall be set correctly.

The “number of registers” in the request frame shall be twice of that of the parameters to be accessed to, otherwise, it will return to the abnormal response frame.

1. Reading operation

The 16-bit access mode is as described above.

For the 32-bit access mode, the unit of the data returned is 32 bits.

As shown in the following table, reading 4 continuous function codes with P01.01 as the start address (the slave address is 5).

Request frame:

Bytes	Value		Description
	16-bit mode	32-bit mode	
0	0x05	0x05	Slave address
1	0x03	0x03	Command code
2~3	0x0101	0x8101	Start address (in the 32-bit mode, the highest byte of the start address is 1)
4~5	0x0004	0x0008	Number of registers (in the 32-bit mode, the number of registers is twice of that of parameters)
6~7	Check code	Check code	CRC verification

If the operation is successful, the response frame is as follows:

Bytes	Value		Description
	16-bit mode	32-bit mode	
0	0x05	0x05	Slave address
1	0x03	0x03	Command code
2	0x08	0x10	Number of bytes read
3~4	Value P01.01	Value P01.01	Content read: 16-bit mode: 8 bytes in total 32-bit mode: 16 bytes in total
5~6	Value P01.02		
7~8	Value P01.03	Value P01.02	
9~10	Value P01.04		
11~12	Check code	Value P01.03	
13~14	-		
15~16	-	Value P01.04	
17~18	-		
19~20	-	Check code	

If the operation is failed, it will return to the abnormal response frame and its format is as shown above.

There are two types of drive parameters: one type of parameters adopts the decimal system and the other type is the variables adopting the hexadecimal system. The former is used to indicate the actual variables,

such as the current, voltage, frequency, power, torque, percentage, etc. which shall consider the positive and negative. Its data type is int or long. The latter is used for the mode selection or the status indication, such as displaying the parameters selection, indicating the running status, etc. which needn't consider the positive and negative. Its data type is unsigned int or unsigned long. The type and the value range of parameters are as shown in the following table:

Type	Number of bits	Value range	Remarks
int	16	-32768~32767	Parameter of type I
long	32	-2147483648~2147483647	
unsigned int	16	0~65535	Parameter of type II
unsigned long	32	0~4294967296	

If the 16-bit access mode is adopted to read the parameter with an actu al length of 32 bits, the 16 low bits of this parameter of 32 bits will be captured and returned. This value may be not equal to the original value; it will be detailed in the following text.

If the 32-bit access mode is adopted to read the parameter with an actual length of 16 bits, the 32-bit data returned is the data expanded, that is, the length of the 16-bit parameter is expanded. The principles for the length expansion are as follow: if the highest bit of the 16-bit parameter value is 0, its 16 high bits will be filled with 0; if the highest bit is 1, it needs to judge the type of the parameter, for the parameter of type I, its 16 high bits will be filled with 1, but for the parameter of type II, its 16 high bits will be filled with 0.

If the data length is the same, that is, reading the 16-bit parameter in the 16-bit mode or reading the 32-bit parameter in the 32-bit mode, there is no need to expand or cut the length, the original value will be returned.

Assuming the parameter types of P01.01~P01.07 are as follows:

The value of P01.01 is 4500 (16-bit parameter of type I, 0x1194);

The value of P01.02 is 65036 (32-bit parameter of type I, 0x0000FE0C);

The value of P01.03 is -500 (16-bit parameter of type I, 0xFE0C);

The value of P01.04 is 5000 (32-bit parameter of type I, 0x00001388);

The value of P01.05 is 100000 (32-bit parameter of type I, 0x000186A0);

The value of P01.06 is -100000 (32-bit parameter of type I, 0x FFFE7960);

The value of P01.07 is 0x FFFF (16-bit parameter of type II).

The values returned in the reading operation are as shown in the following table:

Register address	Access mode	Value returned	Description
P01.01	16-bit	0x1194	The actual value is returned.
	32-bit	0x00001194	The 16 high bits are filled with 0 and the actual value is returned.
P01.02	16-bit	0xFE0C	The 16 low bits are captured and the value retuned is -500, which is different from the actual value.
	32-bit	0x0000FE0C	The actual value is returned.

Register address	Access mode	Value returned	Description
P01.03	16-bit	0xFE0C	The actual value is returned.
	32-bit	0xFFFFFE0C	The 16 high bits are filled with 1 and the actual value is returned.
P01.04	16-bit	0x1388	The 16 low bits are captured and the actual value is retuned.
	32-bit	0x00001388	The actual value is returned.
P01.05	16-bit	0x86A0	The 16 low bits are captured and the value retuned is -31072, which is different from the actual value.
	32-bit	0x000186A0	The actual value is returned.
P01.06	16-bit	0x 7960	The 16 low bits are captured and the value retuned is 31072, which is different from the actual value.
	32-bit	0x FFFE7960	The actual value is returned.
P01.07	16-bit	0x FFFF	
	32-bit	0x0000FFFF	Parameter of type II, the 16 high bits are filled with 0.

As shown in the above table, when reading the parameter with an actual length of 32 bits in the 16-bit mode, the value returned may not be equal to the actual value. Therefore, please note: the reading operation of the 16-bit mode is only applicable to parameters with the current value range from -32768 to 32767, and the reading operation of other parameters shall adopt the 32-bit mode.

2. Writing operation

(1) Command codes 0x06 and 0x41

Both of these command codes supports changing the single parameter of 16 bits and do not support the 32-bit access mode. If the highest bit of the start register address in the request frame is 1, it will return to the abnormal information frame, indicating that the address is wrong.

Note:

1)The writing operation of the 16-bit mode is only applicable to the parameter of type I with the current value range from -32768 to 32767 and the parameter of type II with the current value range from 0 to 0xFFFF.

2)For the parameter of type I, when these two types of commands are used to write the value of 16 bits into the parameter with an actual length of 32 bits, the actual written value is the expanded value. The principles for the length expansion are as follows: expanding according to the highest bit of the 16-bit parameter value to be written, if the highest bit is 1, the 16 high bits will be filled with 0xFFFF, otherwise, they will be filled with 0x0000. If the expanded value is within the value range of the parameter, the value is valid and it is allowed to change the parameter, then the value can be written successfully. There is no need to expand the parameter of type II.

For example: assuming that the values of function codes P01.01 and P01.02 are 32-bit date and 16-bit data respectively and they are both parameters of type I, when the writing operation on them is successful, the data written are as shown in the following table.

Register address	Value to be written	Actual written value	Description
P01.01	0x1194	0x00001194	The 16 high bits is filled with 0x0000.
	0xFE0C	0xFFFFFE0C	The 16 high bits is filled with 0xFFFF.
P01.02	0x1194	0x1194	
	0xFE0C	0xFE0C	

(2) Command codes 0x10 and 0x43

These two types of command codes can be used to change multiple function code parameters or control parameters and they support both 16-bit and 32-bit access modes.

The 16-bit access mode is as described above.

For the 32-bit access mode, the unit of the data to be written is 32 bits.

As shown in the following table, changing 4 continuous function codes with P02.00 as the start address (the slave address is 5).

Request frame:

Bytes	Value		Description
	16-bit mode	32-bit mode	
0	0x05	0x05	Slave address
1	0x10/0x43	0x10/0x43	Command code
2~3	0x0200	0x8200	Start address (in the 32-bit mode, the highest byte of the start address is 1)
4~5	0x0004	0x0008	Number of registers (in the 32-bit mode, the number of registers is twice of that of parameters)
6	0x08	0x10	Number of bytes of register content
7~8	Value P02.00	Value P02.00	Content to be written: 16-bit operation: 8 bytes in total 32-bit operation: 16 bytes in total
9~10	Value P02.01		
11~12	Value P02.02	Value P02.01	
13~14	Value P02.03		
15~16	Check code	Value P02.02	
17~18	-		
19~20	-	Value P02.03	
21~22	-		
23~24	-	Check code	

If the operation is successful, the response frame is as follows:

Bytes	Value		Description
	16-bit mode	32-bit mode	
0	0x05	0x05	Slave address
1	0x10/0x43	0x10/0x43	Command code
2~3	0x0200	0x8200	Start address (in the 32-bit mode, the highest byte of the start address is 1)
4~5	0x0004	0x0008	Number of registers (in the 32-bit mode, the number of registers is twice of that of parameters)
6~7	Check code	Check code	CRC verification

If the operation is failed, it will return to the abnormal response frame and its format is as shown above.

Note

1)The writing operation of the 16-bit mode is only applicable to the parameter of type I with the writing range from -32768 to 32767 and the parameter of type II with the writing range from 0 to 0xFFFF. The writing operation of other parameters shall adopt the 32-bit mode.

2)For the parameter of type I, when the value of 16 bits is written into the parameter with an actual length of 32 bits in the 16-bit mode, the actual written value is the expanded value. The principles for the length expansion are as follow: expanding according to the highest bit of the 16-bit parameter value to be written, if the highest bit is 1, the 16 high bits will be filled with 0xFFFF, otherwise, they will be filled with 0x0000. If the expanded value is within the value range of the parameter, the value is valid and it is allowed to change the parameter, then the value can be written successfully. There is no need to expand the parameter of type II and they are independent of the values of the 16 high bits.

3)In the 32-bit access mode, no matter the actual length is 16 bits or 32 bits, as long as the value to be written is within the value range of the parameter, the value is valid and it is allowed to change the parameter, then the value can be written successfully.

4)To change the parameter with an actual length of 16 bits in the 16-bit mode, please refer to the description above.

8. Cautions

1.For the command codes 0x10 and 0x43, when writing several function code parameters of the drive continually, if the writing operation of any function code is invalid (for example, the parameter value is invalid, the parameter cannot be changed, etc.), the error message will be returned and none of the parameters can be changed; when writing several control parameters, if the writing operation of any parameter is invalid (for example, the parameter value is invalid, the parameter cannot be changed, etc.), the operation will return from the storage address of the first fault, this parameter and its following parameters cannot be changed normally, but the parameters before it can be written normally and the error message will be returned.

2.For some special function codes, 0x06 and 0x41 have the same function, and 0x10 and 0x43 have the same function. When operating, power on again after power off, the parameters will be saved. These function codes are as show in the following table:

Function code	Function description
P00.03	Parameter protection setting
P02.01	Motor selection
P09.00~P09.05	Input terminals X1~ X6 function selection
P02.04	Main reference frequency selection
P02.06	Main reference & auxiliary reference frequency control
P13.16	PLC running mode
P03.00	Rated power of motor 1
P03.12	Rated power of motor 2
P03.04	Rated rotating speed of motor 1
P03.16	Rated rotating speed of motor 2
P98.06	Drive series selection (manufacturer parameters)

3.Some control parameters cannot be stored into the nonvolatile memory cell. So for these parameters, the command codes 0x41 and 0x06 have the same operation effect, as well as 0x43 and 0x10, that is, write operation. Once power on again after power off, the parameters will not be saved. Please refer to the control parameter table for details.

4.Some internal parameters of MV200 drive are reserved, which cannot be modified through the communication setting. These parameters are as show in the following table:

Function code	Function description
P00.00	Menu mode selection
P00.06	Parameter copy
P03.24	Motor parameter auto-tuning

5. The operation of the host device on the user password

1)Managing the read/write and function codes of function code parameters of the user password protection (except for “read the address of the data displayed” and “display the data switching”).

2)If the user password is set (P00.01), the host device can access to the function code parameters only after “decryption” (write the correct user password to P00.01), but the access to the control parameters and status parameters is not restricted by the user password.

3)The host device cannot set, change or cancel the user password and only the operation panel is able to conduct these operations. The writing operation of P00.01 will be valid only in two situations: decrypt with the password, and write 0 without the password. In other situations, the invalid operation information will be returned.

4)The operation of the host device and that of the operation panel on the user password are independent, even if the operation panel has decrypted already, the host device still need to decrypt to access to the function code parameters, and vice versa.

5)When the host device gets the authority to access to parameters, it will read the user password and return to “0000” rather than the actual user password.

6)The host device gets the authority to access to the function code after “decryption”. If there is no communication within 5 minutes, the access authority is invalid. To access to this function code, please re-enter the user password.

7)When the host device has gotten the access authority (no user password or decrypted already), if the user password is set or changed through the operation panel, the host device still has current access authority with no need to re-encrypt. If the access authority becomes invalid, it needs to re-encrypt (write new password) to get the access authority.

9. CRC verification

For the purpose of improving speed, CRC-16 is often realized through the table. The following is the C language source code for realizing CRC-16. Please note: the final results have exchanged high and low bytes, that is, the result is the CRC checksum to be sent.

```
unsigned short CRC16 （unsigned char *msg, unsigned char length）        /* The function returns the CRC as a unsigned short type */
{
    unsigned char uchCRCHi = 0xFF ;                                     /* high byte of CRC initialized */
    unsigned char uchCRCLo = 0xFF ;                                     /* low byte of CRC initialized */
    unsigned uIndex ;                                                   /* index into CRC lookup table */
    while （length--）                                                  /* pass through message buffer */
    {
        uIndex = uchCRCLo ^ *msg++ ;                                    /* calculate the CRC */
        uchCRCLo = uchCRCHi ^
（crcvalue[uIndex] >>8）;
        uchCRCHi =crcvalue[uIndex]&0xff;
    }
    return （uchCRCHi | uchCRCLo<<8） ;
}
/* Table of CRC values */
const unsigned int  crcvalue[ ] = {
0x0000,0xC1C0,0x81C1,0x4001,0x01C3,0xC003,0x8002,0x41C2,0x01C6,0xC006,0x8007,0x41C7,
0x0005,0xC1C5,0x81C4,0x4004,0x01CC,0xC00C,0x800D,0x41CD,0x000F,0xC1CF,0x81CE,0x400E,
0x000A,0xC1CA,0x81CB,0x400B,0x01C9,0xC009,0x8008,0x41C8,0x01D8,0xC018,0x8019,0x41D9,
0x001B,0xC1DB,0x81DA,0x401A,0x001E,0xC1DE,0x81DF,0x401F,0x01DD,0xC01D,0x801C,0x41DC,
0x0014,0xC1D4,0x81D5,0x4015,0x01D7,0xC017,0x8016,0x41D6,0x01D2,0xC012,0x8013,0x41D3,
0x0011,0xC1D1,0x81D0,0x4010,0x01F0,0xC030,0x8031,0x41F1,0x0033,0xC1F3,0x81F2,0x4032,
0x0036,0xC1F6,0x81F7,0x4037,0x01F5,0xC035,0x8034,0x41F4,0x003C,0xC1FC,0x81FD,0x403D,
0x01FF,0xC03F,0x803E,0x41FE,0x01FA,0xC03A,0x803B,0x41FB,0x0039,0xC1F9,0x81F8,0x4038,
```

0x0028,0xC1E8,0x81E9,0x4029,0x01EB,0xC02B,0x802A,0x41EA,0x01EE,0xC02E,0x802F,0x41EF,
0x002D,0xC1ED,0x81EC,0x402C,0x01E4,0xC024,0x8025,0x41E5,0x0027,0xC1E7,0x81E6,0x4026,
0x0022,0xC1E2,0x81E3,0x4023,0x01E1,0xC021,0x8020,0x41E0,0x01A0,0xC060,0x8061,0x41A1,
0x0063,0xC1A3,0x81A2,0x4062,0x0066,0xC1A6,0x81A7,0x4067,0x01A5,0xC065,0x8064,0x41A4,
0x006C,0xC1AC,0x81AD,0x406D,0x01AF,0xC06F,0x806E,0x41AE,0x01AA,0xC06A,0x806B,0x41AB,
0x0069,0xC1A9,0x81A8,0x4068,0x0078,0xC1B8,0x81B9,0x4079,0x01BB,0xC07B,0x807A,0x41BA,
0x01BE,0xC07E,0x807F,0x41BF,0x007D,0xC1BD,0x81BC,0x407C,0x01B4,0xC074,0x8075,0x41B5,
0x0077,0xC1B7,0x81B6,0x4076,0x0072,0xC1B2,0x81B3,0x4073,0x01B1,0xC071,0x8070,0x41B0,
0x0050,0xC190,0x8191,0x4051,0x0193,0xC053,0x8052,0x4192,0x0196,0xC056,0x8057,0x4197,
0x0055,0xC195,0x8194,0x4054,0x019C,0xC05C,0x805D,0x419D,0x005F,0xC19F,0x819E,0x405E,
0x005A,0xC19A,0x819B,0x405B,0x0199,0xC059,0x8058,0x4198,0x0188,0xC048,0x8049,0x4189,
0x004B,0xC18B,0x818A,0x404A,0x004E,0xC18E,0x818F,0x404F,0x018D,0xC04D,0x804C,0x418C,
0x0044,0xC184,0x8185,0x4045,0x0187,0xC047,0x8046,0x4186,0x0182,0xC042,0x8043,0x4183,
0x0041,0xC181,0x8180,0x4040}

If the CRC checksum of each byte to be sent is computed on line, it will take a longer time, but it can save the program space occupied by the table. The code for computing CRC online is as follows:

```
unsigned int crc_check（unsigned char *data,unsigned char length）
{
    int i;
    unsigned crc_result=0xffff;
    while（length--）
    {
        crc_result^=*data++;
        for（i=0;i<8;i++）
        {
            if（crc_result&0x01）
            {
                crc_result=（crc_result>>1）^0xa001;
            }
            else
            {
                crc_result=crc_result>>1;
            }
        }
    }
    return （crc_result=（（crc_result&0xff）<<8）|（crc_result>>8））;
}
```

10. Application example

To start No.5 drive and make it rotate forward with a speed of 50.00Hz (expressed as 5000 internally), the command is as follows:

Data frame	Address	Command code	Register address	Number of registers	Register content Number of bytes	Register content	Check code
Request	0x05	0x10	0x6400	0x0002	0x04	0x0034, 0x1388	0x30C5
Response	0x05	0x10	0x6400	0x0002	None	None	0x5F7C

No.5 drive coast to stop:

Data frame	Address	Command code	Register address	Register content	Check code
Request	0x05	0x06	0x6400	0x0036	0x1768
Response	0x05	0x06	0x6400	0x0036	0x1768

No.5 drive jog-forward:

Data frame	Address	Command code	Register address	Register content	Check code
Request	0x05	0x06	0x6400	0x00B0	0x96CA
Response	0x05	0x06	0x6400	0x00B0	0x96CA

No.5 drive jog-stop:

Data frame	Address	Command code	Register address	Register content	Check code
Request	0x05	0x06	0x6400	0x0130	0x96FA
Response	0x05	0x06	0x6400	0x0130	0x96FA

No.5 drive fault reset:

Data frame	Address	Command code	Register address	Register content	Check code
Request	0x05	0x06	0x6400	0x0220	0x97C6
Response	0x05	0x06	0x6400	0x0220	0x97C6

Read the running frequency of No.5 drive and the response running frequency is 50.00Hz (16 bits mode):

Data frame	Address	Command code	Register address	Number of registers or number of bytes read	Register content	Check code
Request	0x05	0x03	0x6501	0x0001	None	0xCA82
Response	0x05	0x03	None	0x02	0x1388	0x44D2

Read the running frequency of No.5 drive and the response running frequency is 50.00Hz (32 bits mode):

Data frame	Address	Command code	Register address	Number of registers or number of bytes read	Register content	Checksum
Request	0x05	0x03	0xE501	0x0002	None	0xA343
Response	0x05	0x03	None	0x04	0x00001388	0xB2A5

Change the acceleration time 1 (i.e. function code P02.13) of No.5 drive to be 10.0s, which cannot be saved upon power off (16 bits mode).

Data frame	Address	Command code	Register address	Register content	Check code
Request	0x05	0x06	0x020D	0x0064	0x19DE
Response	0x05	0x06	0x020D	0x0064	0x19DE

Change the acceleration time 1 (i.e. function code P02.13) of No.5 drive to be 10.0s, which cannot be saved upon power off (32 bits mode).

Data frame	Address	Command code	Register address	Number of registers	Number of bytes of register content	Register content	Check code
Request	0x05	0x10	0x820D	0x0002	0x04	0x00000064	0x5E4B
Response	0x05	0x10	0x820D	0x0002	None	None	0xF9F7

Read the output current of No.5 drive and the response output current is 30.0A (16 bits mode):

Data frame	Address	Command code	Register address	Number of registers or number of bytes read	Register content	Check code
Request	0x05	0x03	0x6506	0x0001	None	0x7B43
Response	0x05	0x03	None	0x02	0x012C	0x49C9

Read the output current of No.5 drive and the response output current is 30.0A (32 bits mode):

Data frame	Address	Command code	Register address	Number of registers or number of bytes read	Register content	Check code
Request	0x05	0x03	0xE506	0x0002	None	0x1282
Response	0x05	0x03	None	0x04	0x0000012C	0xBFBE

Read the deceleration time 1 (i.e. P02.14）) of No.5 drive and the response deceleration time is 6.0s (16 bits mode):

Data frame	Address	Command code	Register address	Number of registers or number of bytes read	Register content	Check code
Request	0x05	0x03	0x020E	0x0001	None	0xE5F5
Response	0x05	0x03	None	0x02	0x003C	0x4995

Read the deceleration time 1 (i.e. P02.14）) of No.5 drive and the response deceleration time is 6.0s (32 bits mode):

Data frame	Address	Command code	Register address	Number of registers or number of bytes read	Register content	Check code
Request	0x05	0x03	0x820E	0x0002	None	0x8C34
Response	0x05	0x03	None	0x04	0x0000003C	0xBFE2

11. Scaling of drive parameters

1. Scaling of the frequency: 1:100

To make the drive run at 50 Hz, the main setting shall be 0x1388 (5000).

2. Scaling of time: 1:10

To make the acceleration time of the drive to be 30 s, the function code shall be set as 0x012C (300).

3. Scaling of current: 1:10

If the feedback current of the drive is 0x012C (300), the present current shall be 30 A.

4. The output power is its absolute value.
5. For other parameters, please refer to the function parameter descriptions.

Appendix 2 Braking Components

1. Built-in brake unit drive selection

1) Brake resistor configuration

Attached Table 2-1 Brake resistor accessory

Motor rated power (kW)	Braking resistor model	Braking torque (%)
0.4	70W/750Ω	200
0.75	70W/750Ω	120
1.5	260W/400Ω	120
2.2	260W/250Ω	140
3.7	390W/150Ω	180
5.5	500W/100Ω	120
7.5	500W/75Ω	200
11	800W/50Ω	200
15	1000W/40Ω	200
18.5	1300W/30Ω	200
22	1500W/25Ω	200
30	2500W/20Ω	150
37	3700W/15Ω	120
45	4500W/15Ω	200
50	5000W/15Ω	200
55	5500W/10Ω	160
75	9600W/13.6Ω*2	120
90	9600W/13.6Ω*2	200

Note

The drives of 75kWG / 90kWP and below have built-in braking unit or can customize built-in braking unit. The user only needs to configure external braking resistor when the dynamic braking is required. The drives of 90kWG / 110kWP and above need external braking unit, the wiring between the external braking unit and the drive, braking resistor selection, etc.,please follow the guidance of external braking unit suppliers.

2) Wiring diagram of the drive which has built-in braking unit and the braking resistor

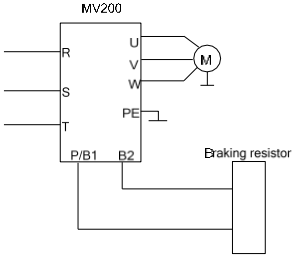

Attached Fig.2-1 Connection diagram of drive and braking resistor

3）Built-in braking unit main function

• Braking operation voltage and braking rate can be adjusted by the function code;

• Braking resistor short circuit protection; (Note: some models do not have this function)

• Radiator overheat protection;

• Braking IGBTmodule abnormal alarm indication;

Note:The connecting wire between the braking units and drive should be within 5 meters, If it is longer than 5m, twisted pair wire shall be adopted. The maximum wire length is 10m.

2. External braking unit selection: Please contact us.

Appendix 3 Warranty and Service

Shenzhen Megmeet Drive Technology Co., Ltd. manufactures motor drive products strictly according to the ISO9001:2008 standard. In case of any abnormal product, please contact your product provider or the headquarter of Shenzhen Megmeet Drive Technology Co., Ltd.. Our company will provide full technical support service for our customers.

1. Warranty period

The product is warranted for 18 months from the date of purchase, however, the warranty date shall not exceed 24 months after the manufacture date recorded in the nameplate.

2. Warranty scope

During the warranty period, any product abnormalities incurred due to our company can be freely repaired or replaced by our company. In case of any following situations, a certain maintenance fees for the product will also be charged even if it is in the warranty period.

1. The damages are caused by fire, flood, strong lightning strike, etc.
2. The artificial damages are caused by unauthorized modifications.
3. The product is damaged due to fall or in transit after purchasing.
4. The damages are caused by using beyond the standard specification requirements.
5. The damages are caused by operation and use failing to follow the instruction manual.

3. After-sales service

1.If there are specific requirements for drive installation and trial operation, or the working status of the drive is unsatisfactory (such as unsatisfactory performance and function), please contact your product agent or Shenzhen Megmeet Drive Technology Co., Ltd..

2.In case of any abnormality, please timely contact your product provider or Shenzhen Megmeet Drive Technology Co., Ltd. for help.

3.During the warranty period, our company will repair any product abnormality incurred due to product manufacturing or design free of charge.

4.If the product is out of the warranty period, our company will make paid repair according to user's requirement.

5. The service charge is calculated by actual costs. If there is an agreement, the agreement shall prevail.

Shenzhen Megmeet Drive Technology Co., Ltd.

Address: 5th Floor, Block B, Unisplendor Information Harbor, Langshan Rd., Science & Technology Park, Nanshan District, Shenzhen, 518057, China

Tel: +86-755-8660 0500

Fax: +86-755-8660 0562

Website: www.megmeet-drivetech.com

Shenzhen Megmeet Drive Technology Co., Ltd.

Drive Warranty Bill

Customer company:	
Detailed address:	
Postal Code:	Contact:
Tel:	Fax:
Machine model:	
Power:	Machine No.:
Contract No.:	Purchase date:
Service unit:	
Contact :	Tel:
Maintenance personnel:	Tel:
Maintenance date:	
Comment on service: ☐Good ☐Fair ☐So so ☐ Poor Other comment: User's signature: Date:	
Return visit record in Customer Service Center: □Telephone return visit □Letter return visit Others: Signature of the technical support engineer: Date:	

Note: This bill becomes invalid if the user can not be visited.

Shenzhen Megmeet Drive Technology Co., Ltd.

Drive Warranty Bill

Customer company:	
Detailed address:	
Postal Code:	Contact :
Tel:	Fax:
Machine model:	
Power:	Machine No.:
Contract No.:	Purchase date:
Service unit:	
Contact :	Tel:
Maintenance personnel:	Tel:
Maintenance date:	
Comment on service: ☐Good ☐Fair ☐So so ☐ Poor Other comment: User's signature: Date:	
Return visit record in Customer Service Center: □Telephone return visit □Letter return visit Others: Signature of the technical support engineer: Date:	

Note: This bill becomes invalid if the user can not be visited.

Parameter record table

Wring diagram

